ARMY COMMUNICATOR

Approved for public release;
distribution is unlimited.
Headquarters,
Department of the Army

Voice of the Signal Regiment ❖ PB 11-02-2 Summer 2002 Vol. 27 No. 2

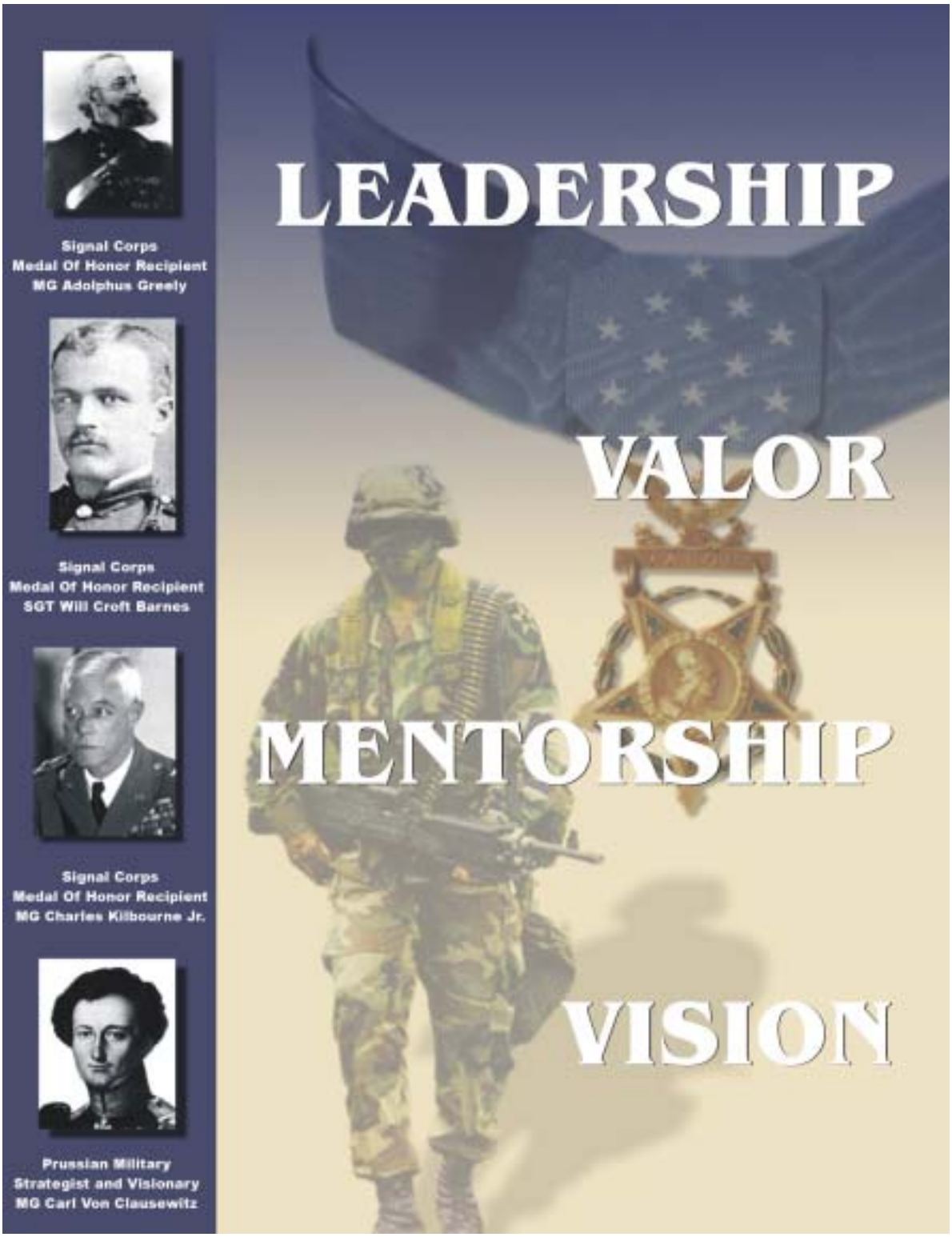

❖ Special focus: Leadership, valor, mentorship and vision, Pgs. 2-16

❖ Army Transformation Wargame 2002, Pg. 36

❖ Bridging the digital delta, Pg. 40

❖ Meeting warfighters' need for streaming video and video on demand, Pg. 46

Chief of Signal's Comments

Synchronizing with the Objective Force

Joint Tactical Radio System and Warfighter Information Network-Tactical will better satisfy Objective Force warfighters' needs. This is a direct result of the combined-arms working group hosted by Training and Doctrine Command in January.

Led by Signal Regiment efforts, this was the first time TRADOC used a concept-based approach in the requirements-determination process. The concept-based approach will change the way the Army works with our industry partners to field communications systems for the OF.

Using the perspective of a 2010 operating environment, the working group first evaluated OF warfighting concepts using operational vignettes. This approach determined required capabilities for these concepts and ways to empower and enable the warfighter to realize these concepts. The process was fully focused on the future warfight but was simultaneously balanced against battle labs' experimentation to provide insight into technically achievable capabilities and interface requirements for legacy and interim-force systems.

Foundational warfighting concepts for the group's work included:

- Full-spectrum operations;
- Optimization for offense;
- Purpose-centric operations;
- Information superiority;
- Tactical-information sphere;
- Extended precision reach;
- Entry and decisive operations;
- Knowledge-based battle command;
- Decentralized operations;
- Synergy through virtual teaming;
- Cooperative engagements;
- Agility/versatility;
- Tailorability;
- Reachback;
- Split-based operations; and
- High-operations-tempo support.

The result of the concepts-based approach is a reorientation and substantial shift in WIN-T and JTRS requirements. Of particular note, WIN-T has a completely new "charter"; there are a number of changes in the operations-requirements document since just a year ago, when I discussed WIN-T in the Chief of Signal Comments for ***Army Communicator***'s Spring 2001 edition.

MG John P. Cavanaugh
Chief of Signal

(See Fall 2001 Chief of Signal Comments for a discussion of JTRS.)

The revised WIN-T ORD will provide warfighters with a network that's optimized for offensive operations; operates across increased strategic distances; supports dispersed operations through global virtual teaming; and delivers network components that are scalable/tailorable and dynamically adaptive to mission, task and purpose. As the new ORD is written, WIN-T will provide the Army with mobile reach; reachback connectivity with higher throughput; enterprise-level network management; a reliable network consistent with commercial-communications service providers; seamless interoperability for joint and coalition operations; access to unclassified through top-secret information; and information-dissemination and speed-of-service capabilities that will enable "sensor-to-shooter" networking.

The revised JTRS ORD will provide warfighters with a networking radio that's focused on capabilities to implement a mobile, flexible, on-the-move, networking infrastructure for passing voice, data and video to commanders operating in a dispersed, dynamic environment. As the next-generation tactical radio, JTRS will provide increased interoperability and powerful, seamless, simple, mobile networking. JTRS reduces the commander's dependence on line-of-sight and terrestrial relays, yielding a reduced force-protection burden for him – JTRS gets the communication relays off the hilltops.

JTRS and WIN-T are now fully integrated, grounded in OF concepts and crafted to deliver one seamless communications and information system, or "tactical infosphere." This tactical infosphere will enable and empower the OF, increasing its deployability, versatility, agility, lethality, survivability and sustainability. The tactical infosphere will also be engineered to maintain interoperability with legacy and interim forces.

JTRS/WIN-T's substantial shift provides our industry partners with a more accurate and deconflicted azimuth to direct their research, development and delivery of leap-ahead technologies. The synergy of JTRS and WIN-T through virtual capabilities for teaming, training and rehearsals – imbued by the power of timely, relevant and accurate actionable information – will empower the OF commander with a heretofore-unseen level of combat effectiveness by establishing information as an element of combat power that enhances mobility, lethality, survivability and sustainability.

Since information becomes an element of combat power in the OF, the Signal Regiment has many challenges (and opportunities to succeed) ahead. Each leader and soldier is responsible for lifelong learning and should subscribe to professional journals like ***Army Communicator*** to keep updated on topics such as OF, WIN-T or JTRS. The Regiment, as several Signal leaders have said previously, is the warfighter's and OF's enabler for information dominance; your Army and your nation depend heavily on you.

Acronym QuickScan

JTRS – Joint Tactical Radio System
OF – Objective Force
ORD – operational requirements document
TRADOC – Training and Doctrine Command
WIN-T – Warfighter Information Network-Tactical

U.S. ARMY SIGNAL CENTER AND FORT GORDON

ARMY COMMUNICATOR

Worldwide web homepage address http://www.gordon.army.mil/AC/
E-mail ACeditor@gordon.army.mil

PB 11-02-2
Summer 2002
Vol. 27 No. 2

Voice of the Signal Regiment

COMMAND

Commander/Commandant
MG John P. Cavanaugh
Command Sergeant Major
CSM Stanley Davis

EDITORIAL STAFF

Editor-in-Chief/Graphic Designer
Lisa Alley
Senior Adviser
Susan Wood
Illustrations
Lisa Alley, SGT Clifton McDonald, SSG Michael Nesmith
Photography
Michael Bennett, CPT Kevin Bosch, TSgt. Jack Braden, CW2 William Crow, Rich Garrett, SPC Robert Jones, CPT Sonise Lumbaca, SPC David Podwoski, Anthony Ricchiazzi, SSG Tim Volkert, Rudi Williams

Army Communicator (ISSN 0362-5745) (USPS 305-470) is an authorized, official quarterly professional bulletin of the U.S. Army Signal Center, Fort Gordon, Ga. 30905-5301. Second-class official mail postage paid by Department of the Army (DOD 314) at Augusta, Ga. 30901 and additional mailing offices.

POSTMASTER: Send address changes to ***Army Communicator***, U.S. Army Signal Center, Fort Gordon, Ga. 30905-5301.

OFFICIAL DISTRIBUTION: ***Army Communicator*** is available to all Signal and Signal-related units, including staff agencies and service schools. Written requests for the magazine should be submitted to Editor, ***Army Communicator,*** U.S. Army Signal Center, Fort Gordon, Ga. 30905-5301.

This publication presents professional information, but the views expressed herein are those of the authors, not the Department of Defense or its elements. The content does not necessarily reflect the official U.S. Army position and does not change or supersede any information in other official U.S. Army publications. Use of news items constitutes neither affirmation of their accuracy nor product endorsement.

Army Communicator reserves the right to edit material.

CORRESPONDENCE: Address all correspondence to ***Army Communicator,*** U.S. Army Signal Center and Fort Gordon, Signal Towers (Bldg. 29808A), Room 707, Fort Gordon, Ga. 30905-5301. Telephone DSN 780-7204 or commercial (706) 791-7204. Fax number (706) 791-3917.

Unless otherwise stated, material does not represent official policy, thinking, or endorsement by an agency of the U.S. Army. This publication contains no advertising.

U.S. Government Printing Office: 1984-746-045/1429-S.

Army Communicator is not a copyrighted publication. Individual author's copyrights can be protected by special arrangement. Acceptance by ***Army Communicator*** conveys the right for subsequent reproduction and use of published material. Credit should be given to ***Army Communicator.***

Table of Contents

Features

2 **Leadership and valor: the Medal of Honor**
Lisa Alley

3 **Medal of Honor profile: PVT Morgan Lane**

4 **Medal of Honor profile: SGT Will Croft Barnes**

5 **Medal of Honor profile: MG Charles Kilbourne Jr.**

7 **Inherent vision, inherent valor**
Michael Kolton

9 **Medal of Honor profile: COL Gordon Johnston**

11 **Medal of Honor profile: MG Adolphus Greely**

12 **Women's memorial exhibit tells story of women spies**
Rudi Williams

15 **Let's not forget about leadership**
MAJ Clark Backus

36 **Army Transformation Wargame 2002: Objective Force communications in global conflict**
Geoffrey Wells and Donald Paul

40 **Bridging the "digital delta": training III Corps Signaleers**
COL Dennis Via and MAJ Linda Jantzen

46 **Streaming video and video on demand: part of the new warfighting requirements**
LTC Jeff Girard

51 **A combined network: asynchronous-transfer mode, tactical high-speed data network and legacy mobile-subscriber equipment**
CW2 Curtis Newkirk and MAJ Linda Jantzen

60 **Hard work precedes user-friendly data communications for 49th Armored Division**
SPC Robert Jones

62 **Unmanned aerial vehicles proving their worth over Afghanistan**
Jim Garamone

Cover: Leadership, valor, mentorship, vision -- soldiers' qualities and Army values exemplified by the Signal Regiment's Medal of Honor recipients. Cover by SGT Clifton McDonald

Departments

17 Circuit check

Official:
JOEL B. HUDSON
Administrative Assistant to the Secretary of the Army
0203604

By Order of the Secretary of the Army:
ERIC K. SHINSEKI
General, United States Army
Chief of Staff

Leadership and valor: the Medal of Honor

Signal Corps has 5 recipients of nation's highest honor

by Lisa Alley

This ***Army Communicator*** edition covers traits Signaleers should possess beyond their technical expertise. Several stories cover leadership, mentorship and the responsibility of training subordinates, as well as the leadership traits of valor and *coup d'oeil* vision (in French, literally "stroke of the eye"), defined as "a glance embracing a wide view" or "an in-depth survey done with a glance."

First are profiles of the five Signal Corps members who received the Medal of Honor, the nation's highest military honor. The first Signal MoH was awarded to PVT Morgan Lane. While Lane's profile may not illustrate the leadership qualities present in MoH recipients as well as the other profiles do (of the more than 3,400 Army MoHs awarded, more than 1,500 were given for acts conducted during the Civil War, but most of those weren't deserving of the MoH according to the higher standards we have today), all recipients are paragons of selfless sacrifice and other Army values.

The battlefield is no respecter of job or rank – ***all*** soldiers must be ready to risk their lives at any time. The two MoHs President George W. Bush awarded posthumously May 1 illustrate this – one MoH went to a World War II Army dentist who died while single-handedly fighting off enemy troops, and the other to an Army pilot who died marking enemy targets to save friendly soldiers during the Vietnam War.

Dr. (CPT) Benjamin Salomon received his MoH for heroism on the Pacific island of Saipan July 7, 1944. CPT Jon Swanson received the award for his bravery Feb. 26, 1971, in the skies over Cambodia.

Figure 1. The Army's version of the Medal of Honor features MG George Gillespie's medal design, adopted in 1904, and the neck-ribbon style adopted in 1944.

Salomon was a dentist serving as a surgeon with 27th Infantry Division. The division had invaded Saipan, in the Marianas Islands. He was at his battalion's aid station when the unit came under a massive attack by thousands of Japanese soldiers. "The American units sustained massive casualties, and the advancing enemy soon descended on Salomon's aid station," the president during the May 1 ceremony at the White House.

Salomon killed several enemy soldiers as they tried to enter the aid station from different directions. As the attacks continued, he ordered comrades to evacuate the tent and carry away the wounded. "He went out to face the enemy alone and was last heard shouting, 'I'll hold them off until you get them to safety. See you later,'" Bush said.

Salomon replaced a dead machinegun crew and began firing on the attackers. When American troops retook the ground, they found his body still at the machinegun – surrounded by 98 dead Japanese soldiers.

Swanson was an Army pilot supporting South Vietnamese troops in Cambodia. He was serving his second tour in Vietnam. Flying an OH-6 helicopter, Swanson was called in to provide close air support.

"Flying at tree-top level, he found and engaged the enemy, exposing himself to intense fire from the ground," Bush said. "He ran out of heavy ordnance, yet continued to drop smoke grenades to mark other targets for nearby gunships.

"Swanson made it back to safety, his ammunition nearly gone and his scout helicopter heavily damaged," Bush continued. "Had he stayed on the ground, no one would have faulted him. But ... he had seen that more targets needed marking to eliminate the danger to troops on the ground. He volunteered to do the job himself, flying directly into enemy fire until his helicopter exploded in flight."

The Signaleers' MoH stories portray the same type of valor. We

hope you appreciate reading the stories of Lane, SGT Will Croft Barnes, MG Adolphus Greely, COL Gordon Johnston and MG Charles Kilbourne Jr.

The Salomon and Swanson MoH information was excerpted from a news release by Jim Garamone of American Forces Press Service. For more information on the MoH, visit the Army's website (www.army.mil) and click on the link for the Center of Military History. Or, see the interesting history of the medal's first 55 years at www.medalofhonor.com/ 1st55Years.htm.

*Ms. Alley has edited **Army Communicator** since June 1995. Previous jobs include editor of **The Sheppard Senator**, the installation newspaper at Sheppard AFB, Texas; editor of the award-winning post newspaper **Panorama**, Fort Ord, Calif.; command information officer, Fort Ord; and 7th Infantry Division (Light) and Fort Ord division move and base-closure information specialist. A former soldier, she has also served as a military and civilian reporter, accumulating about 25 years' experience in journalism and Army public affairs. She has served as a Keith L. Ware (the Army journalism awards) judge and briefed English defense and aerospace-industry representatives in London on how the Signal Regiment uses the worldwide web. Formerly the U.S. Army Signal Center and Fort Gordon web manager, she was also a seminar leader on public affairs and the web in the 2001 Worldwide Public Affairs Symposium.*

ACRONYM QUICKSCAN

MoH – Medal of Honor

Medal of Honor profile: PVT Morgan Lane

For Civil War service (1865)

Second-Class PVT Morgan Lane's military service began with his enlistment Aug. 22, 1862, in Company I, 5th Regiment of Michigan Cavalry, at Allegan, Michigan. In the cavalry he rose to the rank of sergeant. In March 1864, Lane transferred to the Signal Corps and was appointed a second-class private April 1, 1864. His entire service was in the Civil War's Army of the Potomac, from which he was honorably discharged June 24, 1865.

After November 1864, he served in 5th Corps, to whose headquarters he was attached in early April 1865 as the orderly of LT P.H. Niles, a Signal Corps officer. During the Union pursuit of GEN Robert E. Lee's army, the event occurred that earned Lane the Medal of Honor – taking place about one year after he transferred to the Signal Corps.

Lane, Niles and an engineer captain were in advance of Union Army troops near Jetersville, Va., April 6, 1865, when they encountered Confederate sailors escaping their boat ***Nansemond***. The historical record is slim on what happened; all we know is from Niles' description of the event as quoted in the April 20, 1865, report of CPT Charles Davis, Chief Signal Officer, Army of the Potomac. Lane, Niles and the engineer captain captured seven Confederates: two naval officers, one engineer, one signal officer and three enlisted men, per Niles' account. "The flag of the gunboat ***Nansemond*** was secured from one of these enlisted men by Second-Class Private Morgan D. Lane, U.S. Signal Corps," Niles reported.

In early 1866 Lane sent to Congressman Charles Upson of Michigan a slightly different account of the event. Lane claimed to have captured the ***Nansemond***'s commanding officer and the flag that "was on his person." Continuing, Lane said he was given 30 days' leave and was promised a "gold medal" for his deed. Lane sought Upson's help in claiming his gold medal.

Upson forwarded Lane's letter to the War Department, which tried to locate ***Nansemond***'s flag to substantiate Lane's claim that he had captured it. The flag didn't turn up. However, by March 1866, Lane's letter had reached Chief Signal Officer COL Benjamin Fisher. Fisher endorsed Lane's medal by quoting from Davis' April 1865 report – but with a correction that Lane had secured the flag from an enlisted man, not from ***Nansemond***'s commander as Lane recalled. Fisher's endorsement was all the evidence the War Department needed; Lane's Medal of Honor was issued March 16, 1866.

The Signal Regiment inducted Lane as a Distinguished Member of the Regiment in 1997.

Medal of Honor profile: SGT Will Croft Barnes

For Western service (1881)

In its westward expansion, America depended on the 8,000 miles of wire the Signal Corps constructed between 1873 and 1883 to connect 77 frontier telegraph and weather offices. The Signal Corps was responsible for three telegraph systems that carried both military and commercial traffic, and which played a key role in the Indian Wars and final expansion of the continental United States to its Pacific border.

Among these systems was the 29-station line that connected isolated posts such as Fort Bliss, Santa Fe and Fort Apache in the Arizona Territory. It was at Fort Apache, one of the most pivotal posts in the military Department of Arizona, that First-Class PVT Will Croft Barnes honored himself and the Signal Corps. Barnes' Medal of Honor was not recommended for any specific event but for his actions during August and September 1881.

In the summer of 1881, Apache medicine man Nock-aye-Klinny was stirring up the Indians, including the Army's Indian scouts, in the Fort Apache area. Fort Apache's commander, COL Eugene Carr, was ordered to arrest the medicine man Aug. 15, the same day the telegraph line between Fort Apache and Camp Thomas some 90 miles away went down (it remained down until early September). Fort Apache was cut off from outside wire communication. The fort was further isolated when heavy rains and floodwaters hit the area, preventing arrival of reinforcements.

Carr set out Aug. 29 with 117 men to capture Nock-aye-Klinny, who was at an Indian village on Cibeque Creek some 45 miles northwest of the post. Less than 70 soldiers, along with a number of civilians, were left at Fort Apache. Shortly after Carr's departure, nearby Indians began to ride toward his trail. MAJ Melville Cochran, Fort Apache's acting commander, warned Carr about the Indians and began preparing the post for an attack.

Rumors played havoc at Fort Apache. Word came the evening of Aug. 29 that Indians had killed Carr's entire command. Cochran sent couriers to warn Camp Thomas and a nearby ranch, then dispatched another courier to the Black River to bring in two soldiers working on the ferry on the road to Camp Thomas. Indians killed the ferrymen and the soldier sent to alert them. On the morning of Aug. 31, Cochran heard from the post trader that five of Carr's officers and most of his men were dead. Cochran sent a second message to Camp Thomas for reinforcements. Camp Thomas never received that dispatch. Thomas Owens, a civilian mail carrier who had volunteered for the mission, traveled only a few miles from Fort Apache before Indians killed him.

Their relief attempts thwarted, their telegraph still down and their uncertainty over what really happened to Carr sent a wave of apprehension throughout Fort Apache. Anxiety was heightened by the fact it was impossible to see more than a mile westward. The Indians or Carr, if still alive, might approach from that direction.

Barnes volunteered to go alone to a mesa which stood some 2,000 feet high about a mile to the north of

Figure 2. Will Croft Barnes as a Signal Corps private, 1879.

the fort. The mesa would serve as a "tower" from which Barnes could signal. In spite of the proximity of four or five Apaches "with no friendly intent," Barnes held his position. Then off to the west he saw a cloud of dust; it turned out to be Carr's advance guard. A half-mile behind the guard Barnes saw some 50 cavalrymen. He signaled the good news to the fort.

As matters turned out, Carr had arrested Nock-aye-Klinny at Cibeque. In a rescue attempt, the Indians who had followed Carr's trail attacked the party, and the Indian scouts mutinied. Nock-aye-Klinny was killed, as well as four soldiers.

The following week tensions continued. Barnes and SGT John Smith were guarding a cemetery detail Sept. 1 a half-mile away from the fort when Indians began firing at them. About the same time Indians attacked the post. Barnes and Smith returned fire. Barnes also went out Sept. 8-9 with an armed escort to repair the telegraph line.

To Carr Cochran applauded Barnes' conduct "during all the trouble," adding "he was prompt and unhesitating in the discharge of all duties assigned him, more than once being exposed to great danger." Carr endorsed 12 officers and enlisted men for the Medal of Honor, singling out Barnes for his actions during the Indian attack on Fort Apache Sept. 1 and for his "good conduct and attention to duty" during the "trying period" Aug. 29-Sept. 10.

GEN William Sherman, the Army's commanding general and the acting secretary of war, approved the Medal of Honor Nov. 8, 1882, for Barnes and the others (an investigation into the Battle of Cibeque delayed action on Carr's recommendations). In Spring 1883, Barnes – by then a sergeant – received the medal in a retreat ceremony at Fort Apache.

Barnes remained at Fort Apache until he received a medical discharge Sept. 15, 1883. In his post-Army years Barnes was a rancher, legislator, forester, preservationist and a noted and copious writer. He died in Phoenix, Ariz., Dec. 17, 1936, and his ashes were interred at Arlington National Cemetery in 1937. The Signal Regiment inducted him as a Distinguished Member of the Regiment in 1998.

Medal of Honor profile: MG Charles Kilbourne Jr.

For service in the Philippine Insurrection (1899)

Charles Evans Kilbourne Jr. is the only Signal officer to win the Medal of Honor while performing a combat communications mission. The Signal Officer Basic Course at Fort Gordon, Ga., named its leadership award for him, and the Signal Regiment inducted him as a Distinguished Member of the Regiment in 1997.

A Signal Corps officer's son, Kilbourne was born in 1872 at Fort Whipple, Va. – later renamed Fort Myer – and spent most of his boyhood years at Army installations. He graduated from Virginia Military Institute in 1894 with a degree in civil engineering, then worked as a surveyor in New Mexico and the Pacific Northwest. He was an observer with the U.S. Weather Bureau until the war with Spain in 1898.

As America went to war, he joined the Volunteer Signal Corps, an expansion of the regular Signal Corps assigned to provide tactical communications to the rapidly expanding Regular Army. To be accepted as an officer in the VSC, the applicant had to be adept in an electrical vocation or telegraphy. Kilbourne was one of the few commissioned VSC officers appointed for his leadership potential rather than for his technical expertise.

Figure 3. Charles Kilbourne as superintendent of Virginia Military Institute, circa 1938. *(Photo courtesy of Virginia Military Institute archives.)*

Kilbourne was assigned to First Company, VSC, and shipped out with MG Arthur MacArthur's expedition to the Philippine Islands, where he participated in the campaign against Spanish forces climaxing in the seizure of Manila. Following the end of hostilities with Spain, the Philippine Insurrection erupted Feb. 4, 1899. The following day, Kilbourne earned a place in history and the MoH. According to the MoH citation, "Within ... 250 yards of the enemy and in the face of rapid fire, [he] climbed a telegraph pole at the east end of [Paco Bridge] and, in full view of the enemy, coolly and carefully repaired a broken telegraph wire, thereby re-establishing telegraphic communication to the front."

After Kilbourne returned to the United States, he applied and was accepted in the Regular Army as an infantry officer in 14th Infantry Regiment. In late 1899, he participated in the Boxer Rebellion in China, where he led his platoon in the assault that captured the Imperial City Gates. After helping suppress the rebellion, his regiment

returned to duty in the Philippines, where he performed duties with the provost marshal's office. It was during this tour that Kilbourne made an important career decision; in 1902 he requested and was granted a branch transfer to the Artillery Corps.

Transferred to Fort Monroe, Va., to attend the artillery school, he was his class's honor graduate and was assigned as the post district adjutant, a highly competitive and reputable position in his day. He served in this position for two years. Promoted to captain in 1905, he assumed successive commands of coast-artillery companies.

While commanding 35th Company, Coast Artillery Corps, Kilbourne returned to the Philippines to defend Manila Bay. Kilbourne began constructing an elaborate defensive-fortifications system on Corregidor Island. These fortifications were to significantly affect the course of world events. In fact, the British credited Kilbourne's construction with saving Australia by delaying Japanese advances at the beginning of World War II. (His efforts were finally completed in 1932 when, as a brigadier general, he commanded all of Manila's harbor defenses.)

In 1909 Kilbourne left Corregidor to assume his duties as inspector, and later as superintendent, of the Philippine Constabulary Bureau and School. His outstanding performance was not limited to the training environment. When Moro guerrillas threatened the local area, he undertook several tactical operations against them.

In 1911 he was assigned to the War Department General Staff, where he developed plans for the defense of Guantanamo Bay, Cuba. He served in several staff positions for the next six years. While serving as chief of staff, Southeastern Department, in Charleston, S.C., Kilbourne recognized the need for a Regular Army post in that section of the country. His foresight led to the establishment of Fort Jackson, S.C.

When the United States declared war on Germany in April 1917, MG Leonard Wood selected him to be his chief of staff of 89th Infantry Division. In preparing to move the division to France, Kilbourne made a predeployment, fact-finding trip to the front in France, where a mortar shell seriously wounded him. He returned to Camp Funston, Kan., where 89th Infantry Division was training for the European theater. Not deterred by his wounds, Kilbourne led the division's advance party to France and prepared the way for 89th Infantry Division's entry into combat.

Figure 4. President John F. Kennedy greets Kilbourne in early 1963 at a lawn party hosted by the White House for Medal of Honor recipients. Kilbourne was the oldest MoH recipient present, according to Kilbourne family historian Jim Kilburn. A few months after this photograph was taken, Kilbourne died and Kennedy was assassinated in Dallas.

Once the division was in combat, the chief of staff set an example in leadership by "moving among the forward units, reorganizing them and urging forward." Kilbourne earned the Distinguished Service Cross during the St. Mihiel offensive.

In October 1918, he was promoted to brigadier general and commanded both 36th Artillery Brigade and 3rd Infantry Brigade of 2d Division. MG John Lejune, 2d Division's commander, said of Kilbourne that he executed his duties in an "excellent, able, conscientious and painstaking" manner. In fact, Kilbourne's performance in these last two assignments earned him the Distinguished Service Medal. He was the only soldier at that time to hold the nation's three highest awards.

Upon his return to the United States and the reduction of the military's size, Kilbourne reverted to his permanent rank of major in the Regular Army. Assigned as an instructor and student to the Army War College in Washington, D.C., he graduated with honors and later became a course director at the college. By 1928 he was promoted to brigadier general in the Regular Army and served another tour in the Philippines. He was assigned to Fort Sam Houston, Texas, in 1936 as a major general, where he commanded 2d Division until his retirement Dec. 31, 1936.

He then served as superintendent of the Virginia Military Institute for nine years until he retired from

that post for health reasons. Kilbourne died Nov. 12, 1963, and is buried at Arlington National Cemetery.

"He died a week before [President John F.] Kennedy and was buried in Arlington with of course much the same ceremony – the riderless horse, the caisson … it was magnificent and unspeakably sad," said Kilbourne's granddaughter, Lisa Tracy, in an email to ***Army Communicator***'s editor in October 2001. "I returned from his funeral only to witness it again on television, the private mourning escalated into a national tragedy. It was a very strange time."

JFK is said by members of the Kilbourne family to have remarked at Kilbourne's funeral that "it's so peaceful, I could stay here [at Arlington] forever." This comment turned out to be prophetic, as the president was assassinated in Dallas Nov. 22, 1963, and was also buried in Arlington.

*(**Editor's note**: most of this profile is based on the "Charles E. Kilbourne: a study in leadership" by CPT Paul Hughes, published in **Army Communicator**'s Summer 1985 edition.)*

ACRONYM QUICKSCAN

MoH – Medal of Honor
VSC – Volunteer Signal Corps

Inherent vision, inherent valor

by Michael Kolton
Special to Army Communicator

"War is a realm of danger; therefore courage is the soldier's first requirement," wrote Prussian military thinker MG Carl von Clausewitz. "Courage is of two kinds: courage in the face of personal danger, and courage to accept responsibility, either before the tribunal of some outside power or before the court of one's own conscience."

American society and culture values courage as Clausewitz defined it. Poets, newsmen, citizens and soldiers place valor on a level of admiration parallel with concepts like honor and duty. In addition to our adoration of moral courage, portrayals of physical courage permeate our literature and our minds. The analects of American combat also vividly depict the bravery Clausewitz illustrates.

If there's one lesson-learned of the stories from literature and combat, it's that great leaders – whether military or civilian – possess the qualities Clausewitz describes: physical courage, moral courage and another trait called *coup d'oeil*. Clausewitz's definition of a great leader is personified in MG Charles Evans Kilbourne Jr., one of the Signal Regiment's five Medal of Honor recipients.

What makes a great leader: physical courage

During the Philippine Insurrection (Feb. 5, 1899), then-1LT Kilbourne acted in heroism beyond the call of duty. His 1905 MoH citation records the day of bravery; Kilbourne, "within a range of 250 yards of the enemy and in the face of a rapid fire, climbed a telegraph pole at the east end of the bridge and, in full view of the enemy, coolly and carefully repaired a broken telegraph wire, thereby re-establishing telegraphic communication to the front."

This deed of physical courage certainly ranks with those of other honorable American soldiers who risked their lives in combat beyond the call of duty. Yet Kilbourne's leadership characteristics didn't consist of physical courage alone – there's something unique about this Signal officer who later continued his military career in another Army branch. The more in-depth one analyzes Kilbourne, the more one sees the traits of moral courage and *coup d'oeil* – traits that reach more deeply into the soul of a great leader than physical courage does.

The scope of moral courage

Many soldiers remark that when in combat situations, men fight not for their country or commander but for "the buddy next to them." If someone read the 3,400-plus MoH citations, that person could see the ultimate importance of camaraderie among soldiers. Astonishing accounts of valor describe fatally wounded men destroying enemy fortifications, vehicles and personnel to save their fellow soldiers. The accounts portray soldiers who took the brunt of bullets, mines and grenades for their comrades.

These depictions describe physical courage and selflessness to a degree worthy of the utmost respect. However, in addition to these awe-inspiring soldiers, there are a select number of incidents that show a valor contrary to the notion of fighting for the buddy next to you – a valor with a more distant inspiration. Such valor – moral courage – is also seen in Kilbourne.

Although Kilbourne takes his rightful place in the ranks of men who risked their lives (physical courage), he shows a quality that sets him apart. When he climbed the telegraph pole under direct fire, he didn't do so to save his men (the buddy next to him). He didn't take down any enemy positions; in fact, the danger to his troops wasn't immediate and didn't require his extraordinary exposure to enemy fire.

Kilbourne climbed that pole for the sole purpose of completing his mission. This quality of mission-oriented motivation originates from the same spirit that led Kilbourne to his military success as commander and citizen-soldier. It's this mission-oriented trait, required of all great leaders, that drew Kilbourne to expose himself to death so he could re-establish communications between the command and fighting units in the Philippines.

The philosophy "fighting for the buddy next to you" joins in common the acts of enlisted soldiers who have been awarded medals for valor. Yet the separation between a man loyal to his comrades – even to the point of death – and a great leader is the leader's ability to see the necessity of completing a mission.

Clausewitz wrote about this sense of duty in his second concept of courage: the moral courage of taking responsibility. Kilbourne wouldn't have been thought less an officer if he hadn't climbed the 40-foot pole in the middle of crossfire. Yet the "court of [his] own conscience" begged him to do the duty since he subscribed to the intrinsic values of honor and selfless service to the nation. These traits proved an integral part of Kilbourne's soul on that day in 1899.

The vision of *coup d'oeil*

Yet it's not simply the trait of unswerving devotion to completing a mission that motivates a man to take point of his unit and risk death. Clausewitz also described another motivation. An intrinsic part of great leaders – in addition to both physical and moral courage – is a quality at the root of a leader's soul. Napoleon Bonaparte first described this quality, *coup d'oeil*, when he wrote, "There is a gift of being able to see at a glance the possibilities offered by the terrain … one can call it *coup d'oeil* and it is inborn in great generals."

Despite Napoleon's specificity about terrain, Clausewitz furthered the explanation of *coup d'oeil*, "inborn in great generals." "Stripped of metaphor and of restrictions imposed by the phrase [*coup d'oeil*], the concept merely refers to the quick recognition of a truth that the mind would ordinarily miss or would perceive only after long study and reflection," Clausewitz clarified.

It's *coup d' oeil* that birthmarks the souls of great leaders. The ability to recognize on a strategic level the importance of position in a tactical-combat situation is a "truth" Clausewitz vividly paints. *Coup d'oeil* isn't common – in fact, it's uncommon enough to warrant the connotation of legend. However, the trait's existence is proved by the success of American commanders in every war.

Kilbourne's visionary understanding of terrain is credited with affecting the course of World War II. As Kilbourne's Distinguished Member of the Regiment biography describes, "Kilbourne began constructing an elaborate defensive-fortifications system on Corregidor Island. These fortifications were to significantly affect the course of world events. In fact, the British credited Kilbourne's construction with saving Australia by delaying Japanese advances at the beginning of World War II. (His efforts were finally completed in 1932 when, as a brigadier general, he commanded all of Manila's harbor defenses.)"

From *coup d'oeil* springs forth a great leader's ability to assess situations and draw conclusions that result in consequences beyond the scope of immediate circumstances. It's this quality Kilbourne demonstrates in 1899 and in 1932. *Coup d'oeil* comprehension is also the foundation of words that American soldiers esteem: the seven Army values (loyalty, duty, respect, selfless service, honor, integrity, personal courage). These are the values of truth. The intrinsic understanding of truth – Clausewitz's definition of *coup d'oeil* – to which soldiers adhere sets apart leaders of character who are willing to die for their country to complete a mission.

Leadership and the 7 Army values

Consequently, Clausewitz's redefinition of *coup d'oeil* dictates that Kilbourne's life should demonstrate all seven Army values. Kilbourne's loyalty and respect to the nation and for his men were exemplary. His sense of duty, honor and integrity can be seen throughout his career as an officer and by his personal courage Feb. 5, 1899. His love for America can be witnessed in his lifetime of selfless service to the nation – both as a soldier and after he retired from active duty, when he became superintendent of Virginia Military Institute.

Kilbourne can be defined by a sense of honor stemming from the same spiritual characteristics that gave him the ability to lead soldiers, conceptualize terrain and risk his own life for the mission. All these qualities are rooted in *coup d'oeil*, a visionary understanding of the truth – the truth that gives a person the integrity to see right and wrong.

As a cadet at the U.S. Military Academy, I pray to see the same truth that gave Kilbourne the steadfast courage to fight and to serve with honor. Specifically meaningful to me is this excerpt from the Cadet Prayer: "Endow us with courage that is born of loyalty to all that is noble and worthy, that scorns to compromise with vice and injustice, and knows no fear when truth and right are in jeopardy."

Although I do not aspire to kill, I aspire to be honorable. Soldier or not, all people will face a day where doing wrong – which is often easier – entices one to sacrifice one's integrity. However, there's nothing greater than the ability to discern right from wrong, draw a conclusion

and then have the moral courage to choose the harder right. There's nothing more beautifully majestic than the *coup d'oeil* of great leaders – men who saw the truth in their very own souls as well as on the cold, deadly space of the battlefield.

Cadet Kolton, 19, is a member of West Point's Class of 2005. He describes himself as an Army brat, with both parents serving in the Army. He wants to be an airborne-infantry officer like his father, also a West Pointer (Class of 1976). He fights in the 132-pound weight class on the Army's judo team and wishes to major in mechanical engineering at USMA."I passionately study foreign cultures as well," he said. "I participated in a homestay exchange program to Japan when I was 16, and I desire to continue working in the area of Asian studies. Some of my other activities at West Point include Genesis, a cadet fellowship and Bible-study organization, and Navigators, an international Bible-study organization. In my spare time, I also play piano."

CPT Kevin Romano, Kolton's calculus instructor and a Signal officer, noted that Kolton – an outstanding student – studies advanced history, rare for USMA freshmen, and he likes history research and writing as a hobby.

More reading

On War (original German: ***Vom Kriege***), Carl von Clausewitz. Clausewitz is often cited as the most important among the major strategic theorists. Although he's been dead for 171 years (he lived 1780-1831), he's probably the most frequently quoted, most controversial and most modern of the military philosophers – for instance, many of today's business professionals adopt his words as business philosophy.

See also the MoH database on-line at http://www.medalofhonor.com or from the Army's Center of Military History, accessible through the Army homepage at http://www.army.mil.

Kilbourne's Distinguished Member of the Regiment biography is also on-line at http://www.gordon.army.mil/regtmktg/regtnco/kilbrne.htm.

Acronym QuickScan

MoH – Medal of Honor
USMA – U.S. Military Academy

Medal of Honor profile: COL Gordon Johnston

For service in the Philippines (1906)

Gordon Johnston was a cavalryman, but it was while he was detailed to the Signal Corps that he earned his Medal of Honor. Highly decorated – besides the MoH, he received the Distinguished Service Cross, Distinguished Service Medal, three Silver Stars, Purple Heart and France's Officer of the Legion of Honor in World War I (he won every medal authorized at the time of WWI) – he served in war theaters such as the Philippine Insurrection, Cuban Occupation, on the Mexican border and with the American Expeditionary Forces in France in WWI.

The son of Confederate GEN Robert Daniel Johnston, he graduated from Princeton University in 1896. However, he began his military service June 8, 1898, as a 24-year-old enlisted man during the Spanish-American War – as a sergeant in Company M, 2d Mississippi Volunteer Infantry Regiment. He transferred July 1, 1898, to Troop M, 1st U.S. Volunteer Cavalry (better known as the Rough Riders), as a private, in which unit and at which time Leonard Wood was a colonel and Theodore Roosevelt a lieutenant colonel. Both Wood and Roosevelt came to admire Johnston and were powerful friends. Johnston's transfer to the cavalry was significant, for horsemanship and the cavalry were dominating passions with him throughout his military career.

Johnston's enlisted time lasted through most of 1898, then he apparently returned to "civilian life" for a while in late 1898-early 1899. Roosevelt recommended that Johnston be offered a commission as a second lieutenant in 43d Infantry Regiment, which Johnston accepted in August 1899. His service took him to the Philippine Islands and the Insurrection, where in February 1900 he performed an act that years later won him the DSC.

"While in command of a small detachment of scouts," the 1924 DSC citation read, "he displayed remarkable gallantry and leadership in charging a greatly superior force of entrenched insurgents in the face of cannon and rifle fire, driving the enemy from their position and capturing the town of Palo."

Johnston sought and won, with Roosevelt's support, a commission in the Regular Army. In October 1902 Johnston became a first lieutenant in the cavalry and graduated from the Army's infantry and cavalry school as the honor graduate in 1903. However, in September 1903 he was detailed to the Signal Corps. The law provided that officer vacancies in the corps could be filled by line officers detailed for four years. Devoted to the cavalry as he was, Johnston wasn't happy about the Signal Corps assignment, which, he said, "came without examination or application on my part."

Johnston again went to the Philippines, this time as a Signal

officer. On March 7, 1906, he distinguished himself at Mount Bud-Dajo. According to a report by 6th Infantry's MAJ Omar Bundy, Johnston "voluntarily joined me on the trail at daybreak ... before the advance began and accompanied me to the last trench below the cotta. While waiting to complete the dispositions for the charge, he asked and obtained permission to advance to the base of the cotta. This he did under a hot fire from the Morro rifle pit to our left. He was among the first to reach the cotta. When the charge was ordered, while gallantly raising himself up to gain a foothold to climb up in advance of the others, he was severely wounded. This especially brave action ... distinguished his conduct above that of his comrades. …"

Bundy's recommendation that Johnston be awarded the Medal of Honor was approved by the officer commanding the expedition and by the commanding general of the Philippines Division. Johnston's Medal of Honor was issued Nov. 7, 1910. His wound at Bud-Dajo probably earned him the Purple Heart also when this award was re-established in 1932.

While on temporary duty at the German Riding Academy in Hanover in 1906 – where he had been sent before he was restored to regular duty following his injury – he asked to be released from the Signal Corps assignment. The detail was terminated in December 1906.

After he finished attending the German Riding Academy in 1907, his career was "quiet" until the United States entered WWI, then Johnston began rapidly advancing in rank. He moved from an infantry major in the National Army in August 1917 to lieutenant colonel in May 1918 (accepted June 1918) and colonel in October 1918. While Johnston was chief of staff for 82d Infantry Division in October 1918, he helped direct the unit's Argonne-area operations; his performance here garnered him the DSM in 1919. He was again rewarded with a position of higher authority and responsibility when he became acting chief of staff for VII Army Corps.

Johnston graduated from General Staff College in June 1918, and in July 1920 became a lieutenant colonel in the Regular Army. Wood selected Johnston as a member of the Wood-Forbes Mission to the Philippines in 1921 and as assistant to the Governor General.

After Johnston returned to the United States, he graduated from the cavalry advanced course in 1925 and from the Army War College in 1926. He was promoted to colonel in the Regular Army in 1929 and retired from the Army with that rank.

Johnston died at age 60 from a polo accident March 7, 1934. He is buried in Arlington National Cemetery. The Signal Regiment inducted Johnston as a Distinguished Member in 1998.

Camp Gordon Johnston, a 155,000-acre World War II training installation in coastal Franklin County, Fla., was named for him. The short-lived camp (1942-1946) served as an amphibious-warfare training center.

ACRONYM QUICKSCAN

DSC – Distinguished Service Cross
DSM – Distinguished Service Medal
MoH – Medal of Honor

Medal of Honor profile: MG Adolphus Greely

For lifelong service to the Signal Corps

Adolphus Washington Greely served most of his long Army career in the Signal Corps. The Signal Corps' fifth Medal of Honor winner was awarded his medal, in fact, by special act of Congress for that service, joining the elite ranks of Richard Byrd, Floyd Bennett and Charles Lindbergh as the only people to receive a Medal of Honor as a "special legislation" award.

Greely was born March 27, 1844, and enlisted in 1861 at age 17 in 19th Massachusetts Volunteer Infantry. He saw action on some of the Civil War's bloodiest battlefields: Ball's Bluff, Antietam and Fredericksburg. He was wounded three times. In fact, at Antietam he was shot in the face and seriously wounded; historians think this wound was the reason Greely wore a big, bushy beard.

After rising from private to sergeant in 19th Massachusetts, Greely accepted a commission in 1863 in 81st Colored Troops. By the end of the Civil War, Greely was a brevet major of volunteers, and from 1856 to 1867 commanded black troops in the occupation of New Orleans.

In 1867 Greely was commissioned as a second lieutenant in the Regular Army and was assigned to 36th Infantry. Stationed in the West (Fort Sanders, Wyo., and Fort Douglas, Utah), in his off-time he studied telegraphy and electricity. Also in 1867, he was detailed into the Signal Corps and served under GEN Eugene Carr during the 1869 Nebraska campaign against the Cheyenne Indians. He also saw duty at Fort Laramie, Wyo.

In 1870 Greely was assigned to Washington, D.C. His new duty was to help BG Albert Myer, founder of the Signal Corps, organize the U.S. Weather Bureau. From 1872 to 1873 Greely collected data and designed methods for the River and Flood Service. He became known as an adept meteorologist.

After serving as a "troubleshooter" in the construction of frontier telegraph lines, Greely volunteered in 1881 to lead an Arctic weather expedition. On a three-year stint to Ellesmere Island near the North Pole, Greely's party amassed a great deal of data on Arctic weather and tidal conditions but was almost wiped out when relief ships failed to reach them for two successive summers. Eventually absolved of any culpability for his command of the expedition, Greely was recognized for his accomplishments. In 1886 he received the Founder's Medal of the Royal Geographical Society of London and the Roquette Medal of the Societe de Geographie of Paris. In 1923 the American Geographical Society finally awarded him the Charles P. Daly Medal.

Figure 6. Greely in 1887, shortly after President Cleveland advanced him to brigadier general and appointed him Chief Signal Officer.

While in the Arctic, Greely missed a promotion to captain but made that rank in June 1886. Then in March 1887, President Grover Cleveland advanced Greely from captain to brigadier general with his appointment as Chief Signal Officer as then-CSO BG William Hazen's health failed. Greely served as CSO for the next 19 years. Greely reportedly was the "first volunteer private soldier of the Civil War to reach Regular Army general officer rank."

As CSO, Greely fought and won the political battle to save the Signal Corps' very existence. He was responsible for many reforms in the Corps, including streamlining the Weather Bureau until its transfer in 1891 to the Department of Agriculture. Greely's innovation led to the military use of wireless telegraphy, the airplane, the automobile and other modern devices. Representing the United States at the International Telegraph Congress in London and the International Wireless Telegraph Congress in Berlin in 1903, Greely worked to involve the United States in international agreements on communications.

After directing the Signal Corps through the Spanish-American War, he was promoted to major general in February 1906. He then was assigned to command the Pacific Division. Greely coordinated the relief activities in San Francisco during the earthquake and fire of 1906. As commander of the Northern Division, he negotiated an end to the Ute Rebellion of 1905-1906. Greely's last assignment was commander of the Department of the Columbia.

Greely was retired for age (he was 64) in 1908. After a trip around the world, he helped found the National Geographic Society and the first free public library in Washington, D.C. He was active in many fraternal and service organizations.

Figure 7. Stereoscopic photograph taken by H.W. Kilburn of Greely's 1881 expedition to the Arctic. The photograph was later displayed at the Columbia Exposition. H.W. Kilburn was one of the family firm the Kilburn Brothers, who spent their lives in the field of photography. The Kilburn brothers were from a branch of the family Kilbourne, according to Kilbourne family historian Jim Kilburn, and were related to MG Charles Kilbourne, the Medal of Honor recipient. Kilbourne wrote a series of four books titled *An Army Boy in Alaska*, which in fiction depicts Greely's real-life adventures.

On his 91st birthday, March 27, 1935, Greely was presented with a special Medal of Honor "for his life of splendid public service." He died the following October and was buried with full military honors at Arlington National Cemetery.

One biographer believed Greely was "perhaps the foremost example of the small but important group of soldier-scientist-adventurers who led the nation into the 21st century." When Greely died, acting secretary of war Henry Woodring summarized Greely's career: "The career of General Greely is a striking example of the contributions a soldier may make to civilization. The army salutes a brave comrade, a great leader, a distinguished scientist, a devoted servant of Republic."

The Signal Regiment inducted Greely as a Distinguished Member in 1998.

ACRONYM QUICKSCAN

CSO – Chief Signal Officer

Women's memorial exhibit tells story of women spies

by Rudi Williams

ARLINGTON, Va. – Another kind of valor besides the valor of soldiers in combat is memorialized at Arlington National Cemetery here: the valor of American-born women who have served as spies for the United States. The women's memorial at Arlington is featuring a first-of-its-kind exhibit called "Clandestine Women: Untold Stories of Women in Espionage" that honors the work of women spies throughout the nation's history.

The exhibit opened March 26 and will run through Dec. 31.

Curator Linda McCarthy, a 24-year Central Intelligence Agency veteran and founding curator of the CIA museum, said the exhibit coincides with the 60th anniversary of the Office of Strategic Services, the World War II-era forerunner to the CIA. Exhibit sponsor is the National Women's History Museum organization.

Women played a vital role in all facets of OSS activities, including working as spies, saboteurs, guerrilla warriors, cryptographers, cartographers, propaganda experts, agent recruiters and communication technicians, according to McCarthy.

She said she selected the most recognizable women for the exhibit. "Women from all walks of life have served in an intelligence-gathering capacity," she said. "I threw in a few names of people you would probably recognize, like abolitionist, Union Army scout and espionage agent Harriet Tubman; entertainers Josephine Baker and Marlene Dietrich; and television's 'French chef' Julia McWilliams Child.

"Julia told me that of all the things she did in her 90 years of living, her fondest memories were with the OSS in East Asia during World War II," McCarthy said.

Julia McWilliams wanted to join the Navy during World War II but was turned down because of her height – six feet, two inches. After accepting a job with the OSS, she started her service in Washington shortly after the United States entered World War II. She was among more than 900 women who were transferred overseas in 1944. She received the Emblem of Meritorious Civilian Service as head of the registry of the OSS Secretariat in China.

McWilliams proved her mettle so well that she was assigned to a special project having to do with creating a shark repellent. Sharks were a big problem for Navy and OSS divers who tried to place bombs on German U-boats in the Atlantic Ocean. Years later, NASA used her shark-repellent recipe to protect astronauts in space capsules that landed in shark-infested waters.

After the war she married diplomat Paul Child and lived for

six years in Paris, where she attended the world-renowned Le Cordon Bleu culinary academy and acquired a wide knowledge of French cuisine. As Julia Child, she became a cooking expert, author and television personality.

Screen legend Marlene Dietrich was a German citizen until 1937 and was popular on both sides of the Atlantic though a staunch anti-Nazi, McCarthy said. During the war, Dietrich recorded popular American songs and anti-Nazi messages in German that were beamed from London to Germans behind the lines. Where Germans turned off American propaganda before, they stuck around to listen to "Sultry Marlene."

Dietrich reportedly braved icy mud and enemy fire to entertain Allied troops in the battle zones. She was so vigorous an anti-Nazi that the United States, Belgium, Israel and the Netherlands awarded her medals for her work during World War II. America presented her the Medal of Freedom, its highest civilian honor.

Another clandestine World War II heroine was American-born entertainer Josephine Baker, who became a French citizen in 1937, McCarthy noted.

"Oddly enough, people remember Josephine Baker for the costumes she didn't wear – the fact that she was rather scantily dressed," she said. "It's sad to say, with the civil-rights situation being what it was in those days, Josephine found a more hospitable audience in France."

When World War II began, Baker volunteered her services to the French intelligence service. She performed for the troops and was a correspondent for the French Resistance and a sub-lieutenant in the French women's Auxiliary Air Force.

"One of the neat things they did was to write super-secret information in the margins of her sheet music, and she passed up and down the different concert venues throughout Europe," McCarthy said. "The 'groupies' traveling with her entourage were actually French-resistance operatives."

Figure 8. Linda McCarthy talks about quilts with designs that were really coded messages during slavery time.

Baker would make copious notes of what she'd heard at parties, go back to her hotel room and write it on little bits of paper and pin the paper to her underwear, according to McCarthy. "And someone said, 'You're doing what?' She answered, 'Who would dare search Josephine Baker to the skin?' No one ever did," she said.

Figure 9. Film legend Marlene Dietrich recorded U.S. propaganda and sang songs in German to help Allied efforts during World War II.

For her service during World War II, French President Charles de Gaulle presented her the Legion of Honor, which was France's highest decoration. She was also awarded the Medal of Resistance with rosette, McCarthy said.

When Baker died April 12, 1975, the French government honored her with a 21-gun salute. She became the first American woman to be buried on French soil with military honors. Her gravesite is in the Cimetiere de Monaco, Monaco.

Figure 10. Josephine Baker was part of the French women's Auxiliary Air Force during World War II.

McCarthy moved to the antebellum era and the Underground Railroad, calling it a true intelligence operation. "First of all, they talked in code. The 'conductors' were the people who worked the railroad. 'Cargoes' were the slaves who were fleeing. They used codes and secret handshakes," she said. "Another thing, Negro spirituals were their secret way of communicating among themselves.

"Harriet used disguises when she was coming and going out of the South," McCarthy pointed out. "She escaped, but she went back another 18 times where she was known – she had a price of $40,000 on her head – to ferret slaves out and get them up north.

"She actually conducted guerrilla warfare on behalf of the Union Army," McCarthy said. "So she's considered the first African-American woman to serve in the military. She was affectionately called 'General Tubman.'" She received a monthly pension as the widow of a Civil War veteran (her second husband Nelson Davis), but in 1890 was awarded a monthly pension in her own right for her service as a Union spy, guerrilla and combat veteran.

One of the more extraordinary American spies is also among the least known to the public, though nearly revered in the intelligence community. Virginia Hall, McCarthy noted, was "probably the pre-eminent American female spy in OSS."

At its peak, the OSS had more than 17,000 members, 4,500 of whom were women. The women were mainly code clerks, but some, like Hall, were field operatives. She's known as the "limping lady of the OSS" because she actually had a wooden left leg, the result of a pre-war hunting accident, McCarthy said.

After being turned down by the Foreign Service because of her gender and disability, Hall went to Europe and joined the French resistance as its first female field officer, McCarthy noted.

"She actually went in there and worked with the French resistance behind the lines and engaged in guerrilla activities, subversive activities," McCarthy said. Hall learned Morse code and how to work a wireless radio, which made her invaluable to the OSS because communication lines were destroyed after D-Day.

"Prior to D-Day, her nom d'espionage was 'Diane,' but her undercover gig was as a French milkmaid," McCarthy said. "She lived and worked on farms and would go into town selling goat cheese to the Germans who were occupying that sector of France."

McCarthy said the Germans were looking for a one-legged woman hobbling along, but Hall fooled them by teaching herself to walk differently and kind of shuffle along. "She's a tall woman for that age, so she walked with kind of a stoop," she added.

Hall is the only civilian woman during World War II who received the Distinguished Service Cross, the nation's second-highest military valor award. She was honored for her service after the Allied D-Day invasion of Normandy June 6, 1944. After the war, she became one of the CIA's first female operations officers.

"She's one of the most valued American agents we had in the OSS, and she just happened to be female," McCarthy said. "This woman broke two glass ceilings: the business of being female and the disability issue."

Mr. Williams writes for American Forces Press Service.

ACRONYM QUICKSCAN

CIA – Central Intelligence Agency
OSS – Office of Strategic Services

Figure 11. Virginia Hall, the "limping lady of the OSS," receives the Distinguished Service Cross, the nation's second-highest award for valor in combat. She was the only civilian woman to receive the award during World War II.

Let's not forget about leadership

11th Signal Brigade revitalizes its mentorship program to strengthen leadership skills

by MAJ Clark Backus

The 11th Signal Brigade at Fort Huachuca, Ariz., revamped its brigade officer-mentorship program in July 2001 in an effort to more effectively develop its junior officers. The program directs lieutenants throughout the brigade to select a major outside their chain of command to provide them guidance and counseling. The program is already reaping some valuable rewards for 11th Signal Brigade and the Army.

Why a mentorship program?

Much has been written over the past few years about the dissatisfaction of commissioned officers over their interaction with leadership in the Army. Many junior officers report that the senior officers within their chains of command simply don't spend enough time personally developing them. Chaplain (COL) Gil Pingel, former commandant of the U.S. Army Chaplain Center and School, once said, "If the Chaplain Branch is going to perpetuate and do the great things it has done in history, those who are in leadership positions now need to take the time to share those lessons-learned with those who are to follow."

This is true in any branch, including the Signal Corps. We with crossed flags on our collars must be constantly vigilant, guarding against the tendency to be overly systems-focused at the expense of the needs of our soldiers and junior officers. The 11th Signal Brigade mentorship program does that by facilitating interaction between field-grade officers and lieutenants, and it provides mentoring to those most in need of purpose, direction and motivation.

Program design

The 11th Signal Brigade S-1, who is overall manager of the program, introduces the mentorship program to new lieutenants within the first few days of their assignment to the brigade. All lieutenants then meet with the battalion executive officer in the unit to which they are assigned. At this meeting, the XO is responsible for briefing the new officers about the details of the mentorship program. The XO provides the lieutenants with the brigade's mentorship policy letter and a listing of field-grade officers available for selection as a mentor.

The new lieutenants then have 90 days to prioritize three field-grade officers they would like to have as a mentor. They may not select majors who are assigned to the same unit. This policy encourages lieutenants and majors to get to know and interact with officers throughout the brigade, and it builds esprit de corps among the three battalions and headquarters company at Fort Huachuca.

Based on availability (a major can mentor up to five lieutenants at a time, and the brigade now has a number of majors deployed), lieutenants are assigned a major based on their preferences, and the mentorship relationship begins.

Goals of the program

The program is fairly simple and has three basic goals. The first is to improve the leadership skills and decisions of all officers involved, not just those of the lieutenants. Using the Army's definition of leadership, supplied by Field Manual 22-100, mentors are directed to focus some of their interaction with their lieutenants on the Junior Officer Development Support Form. This is a new form of counseling to the majors of the brigade, since it didn't exist when they were lieutenants or company commanders. Use of the form can be an interactive learning experience for both the field-grade officer and the lieutenant. Lieutenants who have reviewed the form with their mentors usually discover that the Army has very clearly defined the necessary attributes, skills and actions that constitute good leadership.

The second goal is to increase junior-officer motivation to continue service in the U.S. Army. Clearly this is a priority of every human-resources department in the corporate world, and so should it be with 11th Signal Brigade and the Army. Retaining good leaders requires that those who are most inexperienced in a unit receive enough personal attention from the more experienced leaders. In other words, new lieutenants must be "introduced" or socialized into their new profession and the unit by those who understand how the unit functions.

This process can assist the lieutenants in determining a number of things that help them get adjusted to their surroundings and professional duties. Along with the lieutenant's assigned chain of command, the mentor can help guide the lieutenant through the first

tour of duty in the Army, helping alleviate many of the initial challenges that may stifle the officer's motivation for continued service.

The third goal is to build esprit de corps within the brigade's officer corps. Nothing builds morale and esprit de corps in a unit faster than shared experiences. These experiences are more valuable if they focus initially on the technical and tactical aspects of our profession. This is where the field-grade officer's experience can be invaluable to the program. Through sharing past experiences of difficult and challenging situations, the major is equipped to provide guidance and advice, thereby instilling confidence in the young officer.

For example, one lieutenant was having difficulty getting the platoon sergeant to follow through with basic instructions. After some discussion with the lieutenant, the mentor found that the lieutenant was reluctant to counsel the platoon sergeant in writing and failed to outline the specific actions and behaviors expected from this senior noncommissioned officer. Eventually, the lieutenant counseled the platoon sergeant in writing using specific, performance-oriented language that defined the lieutenant's expectations of the platoon sergeant. The lieutenant is now in a much better position to evaluate the platoon sergeant's performance.

Along with the hard lessons-learned the mentors can share with their lieutenants, each mentor also schedules time to meet with the officers in a purely social environment by inviting the lieutenants over to the mentor's home on planned holidays or by just meeting regularly with the officers at the unit dining facility.

Benefits to officers and unit

The 86th Signal Battalion, 11th Signal Brigade, has three newly assigned lieutenants acting as company commanders because of the brigade's support for Operation Enduring Freedom. The positions these young officers are filling are not just to fill the role of a rear-detachment commander while the company commander is deployed. Each of these officers still has the responsibility for unit physical training, property accountability, unit maintenance, legal actions and the entire scope of tasks for which a captain is normally responsible.

In these cases, the role of mentors and the focus of a unit's officer-professional-development program take on an increasingly important purpose in assisting these officers in their new responsibilities. The lieutenants in 86th Signal Battalion, having been thrust into the role of commanders, are confronted with a significant number of leadership challenges that many of their peers won't face for another couple of years. The mentors recognize the position their lieutenants are in and provide critical advice and guidance that will help solve some of the leadership challenges the lieutenants are handling.

The mentorship program has enhanced the success of the brigade's scheduled quarterly team-building events by establishing relationships across the brigade. These relationships enhance our ability to deploy Signal task forces consisting of soldiers from all units within the entire brigade. Our tight network of leaders enhances our ability to install, operate, maintain and protect communications networks such as the current OEF network.

Soldiers from all four of 11th Signal Brigade's battalions are deployed to support OEF. The average deployed brigade site is made up of soldiers from multiple company and battalion organizations. Many of the Signal site commanders are junior lieutenants who are supporting joint- and coalition-forces headquarters.

Ultimately the health of 11th Signal Brigade's mentorship program, and the officer corps at large, rests on developing the junior leaders in our units. Our program attempts to strengthen the officer corps by charging many of its field-grade officers with the additional responsibility of sharing their experiences with junior officers across the brigade. In doing so, the Thunderbird Brigade is ensuring its officers are more skilled, committed and motivated for continued service in the U.S. Army. We believe our mentorship program is a contributing factor in our unit's success in OEF and increased retention rates of our officers.

MAJ Backus is 86th Signal Battalion's XO. He's a graduate of the Command and General Staff College and a former armor officer. His previous assignments include tank platoon leader, scout platoon leader, battalion adjutant, battalion logistics officer, commander of C Company, 16th Signal Battalion, and instructor, Behavioral Sciences and Leadership Department, U.S. Military Academy, West Point, N.Y. Backus earned a bachelor's degree in finance from Ohio State University and a master's degree in business administration from Indiana University, majoring in strategic leadership and human-resource management.

ACRONYM QUICKSCAN

OEF – Operation Enduring Freedom
XO – executive officer

Circuit check

News and trends of interest to the Signal Regiment

NEWS

ARMY TRANSFORMATION GOES NORTH TO ALASKA

by CPT Dewayne Ingram and Marshall Webb

FORT RICHARDSON, Alaska – In response to the changing face of today's battlefield, U.S. Army Alaska and 59th Signal Battalion are working together to implement the Army's new full-spectrum, early-entry combat force within the next few years.

"Creation of the Interim Brigade Combat Team is the most significant change in the Army in more than 100 years," said LTC James Riseley, commander, 59th Signal Battalion. "The Army is now planning for two IBCTs in the U.S. Army Pacific theater – one here in Alaska, and one in Hawaii. The new force is the trend for the Army of the 21st century."

The IBCT's mission will be to deploy rapidly, execute early-entry and conduct effective combat operations immediately on arrival to prevent, contain, stabilize or resolve a conflict, Riseley explained.

"The IBCT will enable our Army to remain what Chief of Staff GEN Eric Shinseki describes as '… the most esteemed institution in the nation, the most respected army in the world and the most feared ground force to those who would threaten the interests of the United States,'" Riseley noted. "The challenge of accomplishing this mission has gone north to Alaska."

The Alaska IBCT Army transformation program began in January with the IBCT process-action team at Fort Shafter, Hawaii.

The 59th's operations chief, Marshall Webb, is the USARAK / Directorate of Information Management installation-information-infrastructure architecture integrator, and the 59th's plans chief, Mel Hein, is the DOIM IBCT military construction-Army planner.

"The IBCT is a new concept and therefore information is relatively limited, and everything is new and experimental and growing daily, but 59th is excited about this new program and is digging in with both hands," Webb said. "As we say in Alaska, 'It's not a problem, it's an adventure.'

"The 59th is currently very busy designing I3A infrastructure and designing the communications requirements for the new training facilities and other structures that will support the IBCT," Webb continued.

"We're working hard with 516th Signal Brigade and our sister battalion, 30th Signal Battalion, to set the communications standard for IBCT support, both in Alaska and Hawaii," Webb said.

CPT Ingram and Mr. Webb are assigned to 59th Signal Battalion.

TEAM SIGNAL SOLDIERS SUPPORT YAMA SAKURA

by LTC Michael Curry and CPT Eric Eick

CAMP SENDAI, Japan – 20 soldiers from throughout 516th Signal Brigade provided command-and-control communications for Exercise Yama Sakura 41, a joint bilateral exercise between the United States and the Japan Ground Self-Defense Force, Jan. 25-30 at Camp Sendai.

Other exercise participants included elements from I Corps, Fort Lewis, Wash.; III Marine Expeditionary Force, Okinawa, Japan; Japan's North Eastern Army; and several other U.S. Army Pacific units.

"Among Team Signal's many tasks were maintaining communications and network connectivity, completing installations, cutting cables,

Figure 12. 78th Signal Battalion's PFC Shani Fielder (seated) and two Japan Ground Self-Defense Forces soldiers serve as opposition-force controllers in the high-tech exercise Yama Sakura 41.

working on servers, making hardware swaps, completing repairs, providing data recovery, maintaining communications security and providing video and still photography support," explained MAJ James Doepp, S3 / operations officer, 78th Signal Battalion. "In addition, there were several Signal soldiers working additional tasks as opposing-force data controllers or providing classified courier service."

Most Signal soldiers arrived several days earlier than the exercise as members of the advance party and departed one to three days following the exercise.

"Although the duty was long, it wasn't always particularly onerous, and there was enough off-duty time for the Signal troopers to relax and to get to know their Japanese counterparts," said Doepp.

SPC Judson Lyons of 78th Signal Battalion's local control center enjoyed both the professional and cultural exchanges with Japanese counterparts. "The exercise was outstanding, and I had a good time on and off duty," Lyons said. "It was the first time I sang karaoke. I worked every day and had a good time every day."

CPT Eric Eick, also of 78th's LCC, appreciated the cultural exchange. "The professionalism shown was immense," Eick said. "It's not always easy to integrate two units with completely different traditions and methods of working into one whole, but for Yama Sakura 41, there was a lot of camaraderie shown between both sides. It seemed everybody was trading badges, pins and patches with each other."

"Overall, the experience was positive for both sides," Eick said. "Yama Sakura gives soldiers the opportunity to hone their skills in a different environment and to expand our ever-important bilateral relations with our Japanese hosts."

COL Monica Gorzelnik, 516th Signal Brigade commander, and LTC Michael Curry, 78th Signal Battalion commander, visited Team Signal soldiers at Camp Sendai during the height of the exercise.

"I was so proud of our soldiers," said Gorzelnik, who later presented them brigade certificates and coins. "Their hard work enabled the American and Japanese forces to successfully coordinate their efforts via the C2 capability they provided. Also, our Team Signal soldiers served commendably as role models and ambassadors for the U.S. Army Signal Corps to our Japanese counterparts."

Other Team Signal Yama Sakura participants included SFC Thomas Wolf, 516th Signal Brigade; SSG Marc Dent, 30th Signal Battalion; SGT James Holloman, SGT Cory Urbatsch, SPC Jason Barker, SPC Bobby Flowers, SPC Gary Holmes and SPC Michael Tell, 58th Signal Battalion; and SFC Frances Sanchez-Jones, SGT Takeysha Anderson, SGT Daniel Cruz, SPC Joshua Balog, SPC Kevin Cadungug, SPC Austin Conners, SPC David Podwoski, PFC Shani Fielder, PV2 Christine Colvis and PV2 Mandee Miller, 78th Signal Battalion.

LTC Curry commands 78th Signal Battalion. CPT Eick is assigned to 78th's LCC.

59th's Hector Wins Army's Top GEICO Award

by Bill McPherson

FORT RICHARDSON, Alaska – SSG Carol Hector, 59th Signal Battalion's unit prevention leader for the Alcohol and Drug Abuse Prevention and Control Program the past two years, has been selected as the Army's winner for the 2001 Government Employees Insurance Company Military Service Award.

Figure 13. SSG Carol Hector.

Hector received her award from GEN Eric Shinseki and SGM of the Army Jack Tilley at GEICO's awards banquet April 29 in Washington, D.C. She also received a plaque and a $2,500 stipend.

"We're extremely proud of Hector's accomplishments in the battalion's ADAPC program," said the 59th's CSM Patrick O'Brien. "Under her proactive leadership, the unit's testing ratio increased by 29 percent. She is very meticulous, and her outstanding records system with zero mistakes has established the standard for other UPLs in U.S. Army Alaska."

Last fall, Hector's performance as the battalion's UPL earned her recognition as the Unit Prevention Leader of the Year for both USARAK and U.S. Army Pacific. As USARPAC's honoree, Hector competed with UPLs from other Army major commands for the overall Army title this year.

"Her professionalism and dedication is evident by the recognition she and 59th Signal Battalion have received by these prestigious awards," said LTC James Riseley, battalion commander. "Thanks to her hard work, the Fort Richardson ADAPCP has commended 59th's program as one of the most efficient unit biochemical programs on the installation."

Riseley said that Hector uses breathalyzer testing in conjunction with urinalysis testing in the 59th's program. As the battalion's UPL, she supervises and mentors three alternate UPLs.

"She is an active participant in the war against use of illegal drugs in the Defense Department and the country," Risely noted. "A major part of her job as our prevention program is the training. Hector is very conscientious in providing routine, realistic and interesting training for our soldiers.

"Because of her demonstrated abilities, Hector is frequently called upon to assist USARAK with remote-site testing or to serve as a member of the ADAPCP sweep team," Riseley added.

Mr. McPherson is 516th Signal Brigade's public-affairs officer.

U.S. Northern Command to Debut in October

by Jim Garamone

WASHINGTON – Defense officials announced April 17 the establishment of U.S. Northern Command

as part of the changes in the Unified Command Plan.

At a Pentagon press briefing, Defense Secretary Donald Rumsfeld and Air Force GEN Richard Myers, chairman of the Joint Chiefs of Staff, called the plan the most sweeping set of changes since the unified-command system was set up in 1946.

"(The plan) realigns and streamlines U.S. military structure to better address 21st-century threats," Rumsfeld said. For the first time, commanders' areas of operations cover the entire Earth.

The biggest change is U.S. Northern Command. The new command will stand up Oct. 1 at Peterson AFB, Colo. The NORTHCOM commander will be responsible for homeland defense and will also serve as head of North American Aerospace Defense Command, a U.S.-Canada command.

The current NORAD commander is also commander of U.S. Space Command, also at Peterson. That command will not go away, but it will have a separate four-star officer heading it.

NORTHCOM's area of operations will include the United States, Canada, Mexico, parts of the Caribbean and the contiguous waters in the Atlantic and Pacific oceans.

"The new commander will be responsible for land, aerospace and sea defenses of the United States," Rumsfeld said. "He will command U.S. forces that operate within the United States in support of civil authorities." The command will provide civil support not only in response to attacks but also for natural disasters.

NORTHCOM takes the homeland-defense role from U.S. Joint Forces Command. JFCOM's Joint Task Force-Civil Support and related activities will report to NORTHCOM.

JFCOM headquarters are in Norfolk, Va. The command will retain its mission as a "force generator" to the geographical commands. The change will free the command to focus on its mission of helping transform the U.S. military. This includes experimentation, innovation, improving interoperability and reviewing, validating and writing joint doctrine and preparing battle-ready joint forces and coordinating joint training, simulation and modeling.

The current commander of JFCOM is dual-hatted as the North Atlantic Treaty Organization's supreme allied commander, Atlantic. That alliance command will be split off, and U.S. officials will consult with NATO allies to see how they want this handled.

Mr. Garamone writes for American Forces Press Service.

ARMY SIGNAL COMMAND UNIT WINS ARMY MAINTENANCE EXCELLENCE AWARD

by Sue McKinney

FORT HUACHUCA, Ariz. – Army Signal Command winners and runners-up were announced for the

Figure 14. Commanders-in-chief's areas of responsibility under the new Unified Command Plan. *(Map courtesy of Defense Department)*

Fiscal Year 2001 Army Award for Maintenance Excellence competition by the Department of the Army March 28.

DA initiated the AAME program in 1983. The program's main objective is to improve unit-maintenance readiness and maintenance programs by recognizing each unit's unique exceptional-maintenance program.

This year ASC had three of the four winners and runners-up from Forces Command in the active Modified Table of Organization and Equipment and Table of Distribution and Allowances categories.

This is the last year ASC will compete under FORSCOM. Starting next year, ASC will compete as a standalone unit.

The following units are all first-time DA AAME winners and runner-ups:

- Winner in the TDA medium category is 52d Signal Battalion, 2d Signal Brigade, 5th Signal Command, Stuttgart, Germany;
- Runner-up in the active MTOE medium category is Company C, 63d Signal Battalion, 93d Signal Brigade, Fort Gordon, Ga.; and
- Runner-up in the TDA large category is 41st Signal Battalion, 1st Signal Brigade, Camp Coiner, Korea.

The competition begins at battalion level. Winners are forwarded and compete through the command level to the major command level. Winners at the MACOM level progress to the DA level. Each unit competing is judged by its performance in four major areas: mission accomplishment, effective use of maintenance resources, innovative management accomplishments and personnel quality-of-life programs.

The Army's chief of staff presented the winners with the prestigious AAME plaque and a coin at a ceremony held June 7 in Washington, D.C. The ASC commander and command sergeant major presented awards, certificates and coins to deserving ASC soldiers and civilians at a dinner following the ceremony.

Last year, the AAME program was changed to mirror the secretary of defense's Phoenix Maintenance Award program. The SoD maintenance award recognizes maintenance excellence performed during high-intensity missions in demanding environments. ASC had the Army's only Defense Department winner last year.

"This year 52d Signal Battalion will go forward to compete for the SoD maintenance award because the unit was a winner at the DA AAME competition," said CW3 Kenneth Wycoff, AAME program manager for ASC's office of the deputy chief of staff, G-4 (logistics).

Every year the SoD recognizes six units selected from among all branches of service that have demonstrated the most significant maintenance achievements in mission support and maintenance accomplishments. Of the six units, only one of the finalists is selected as the best overall and awarded the SoD Phoenix trophy.

Ms. McKinney is a public-affairs specialist assigned to ASC's Public Affairs Office.

WARRIOR KNOWLEDGE NETWORK COMING SOON TO ARMY KNOWLEDGE ON-LINE

by Patrick Swan

WASHINGTON (*Army News Service*) – Army Knowledge On-line rolled out its new tactical Warrior Knowledge Network this spring to assist soldiers in "phoning a friend" when they need advice in a pinch.

The network will use a web-based platform, though, not a telephone call, to provide tailored, timely and relevant knowledge and information. It will offer access to this knowledge by identifying or creating "communities of practice" linked through a virtual Warrior Development Center On-line, the tactical knowledge center of AKO.

WKN relies heavily on the communities-of-practice concept. Communities of practice are voluntary associations of people bound together by a shared passion for a particular practice. Soldiers would recognize them from noncommissioned officers' and officers' calls as well as lunchtime discussions on work-related issues.

Although communities of practice have always existed – in antiquity, artisans formed "corporations" and in the Middle Ages tradesmen formed guilds – the Internet has enabled them to become exponentially more powerful, according to G-6 officials.

WKN supports a call by the Army Training and Leader Development panel for the Army to become a "learning organization," G-6 officials said. They said WKN does this by applying state-of-the-art concepts in knowledge management emerging from the commercial sector.

"WKN provides the tools that help leaders and soldiers 'understand first' by providing them with needed knowledge from peers, subject-matter experts, mentors, virtual staffs and other knowledge resources," said Rick Morris, deputy director of the Center for Army Lessons Learned. "Because WKN is both tailorable and scalable, it supports soldiers anywhere (in the field, in garrison or on a deployment)."

WKN leverages new and emerging methods of knowledge creation and transfer, Morris said. He said this helps leaders as they make their units ready, confront complex battlespace and engage in lifelong learning.

"WKN's network-centric approach has human and technical dimensions," Morris said, "linking peers to peers, mentors to mentored, subject-matter experts to those needing expertise, leaders to on-line facilitators and coaches, and members of virtual communities, teams and staffs."

A garrison application of WKN is the Installation Crisis Support System, stood up as a force-protection measure at the direction of Training and Doctrine Command's commander. ICSS was established by CALL with the support of the Fort Leavenworth, Kan., Directorate of Information Management.

"Let's say there's a catastrophic disaster on your base, such as the Pentagon suffered in the Sept. 11 terrorist attack," said Jim Ritter, chief of plans and operations in CALL's Knowledge-Management Directorate. "You could call up the lessons-learned section from the Pentagon crisis response and apply those lessons to your post."

ICSS contains a content center and a library, which pulls everything the domain thinks is important, in-

cluding regulations, publications, laws and lessons-learned, Morris said. These are made easily accessible through browsing tables and a knowledge base.

"That base is structured so that when you ask one specific question, you get one, accurate, specific answer that is dead-on right," Ritter said.

A third component is a collaboration center whereby soldiers can query subject-matter experts from the field.

"WKN provides the human and digital information networks to make available what we call 'knowledge fires,'" Ritter said. "It enables you to get just the right expertise to those who are combating terrorism, engaged in force protection or managing the consequences of something that's gone wrong on the post."

Ritter said ICSS is vital because "no one can be everywhere seeing everything. We must advance the Army's ability to share what it already knows and to create new knowledge that is evaluated, interpreted, understood and woven into the way we do things."

ICSS, Morris explained, is not only an application of WKN – "it's a pilot and testbed for WKN processes and tools that is as applicable to military operations abroad as it is to those in defense of the homeland. It's a place where we can test-drive approaches that advance the Army as learning organization."

"This is a learning revolution from which the Army is positioning itself to achieve intellectual overmatch against anybody, anywhere," Ritter said.

Mr. Swan is a public-affairs liaison officer with the Army's chief information officer/G-6 office.

DEFENSE DEPARTMENT AUTHORIZES NATIONAL DEFENSE SERVICE MEDAL FOR WAR ON TERRORISM

by Rudi Williams

WASHINGTON – All service members, including Coast Guardsmen, who were on active duty on or after Sept. 11, 2001, are eligible to wear the National Defense Service Medal, defense officials announced May 1.

"The sacrifices and contributions made by the armed forces in direct response to the terrorism attacks on the United States and to the long-term resolution of terrorism merit special recognition," said Deputy Secretary of Defense Paul Wolfowitz.

Members of the National Guard and Reserve may also be awarded the medal if they were on federal active duty on or after Sept. 11. Exceptions are if they were on active duty for training; on short tours of active duty to serve on boards, courts, commissions and the like; or on active duty solely to get a physical exam.

Service members previously have worn the National Defense Service Medal for duty in three distinct periods, starting with the Korean War era, defined as June 27, 1950, to July 27, 1954.

Executive Order 11265 authorized the secretary of defense to establish periods of eligibility after Dec. 31, 1960. The second period of eligibility was a loosely termed "Vietnam War era" of Jan. 1, 1961, to Aug. 14, 1974.

The medal was again authorized by a memorandum from the secretary of defense dated Feb. 20, 1991, for active service on or after Aug. 2, 1990 – the beginning of Operation Desert Shield. The termination date was later set as Nov. 30, 1995.

No closing date has been established for this newest period.

Eligible service members can receive and wear the award immediately. Those already awarded the medal for an earlier period will receive a bronze service star device to attach to the ribbon.

Established by President Dwight Eisenhower on April 22, 1953, the National Defense Service Medal indicates military service during a time of war or conflict regardless of the service member's station of duty.

Images, a description and history of the National Defense Service Medal (http://www-perscom.army.mil/tagd/tioh/medals/ndsm.htm) are on the web at http://www-perscom.army.mil/tagd/tioh/medals/ndsm.htm.

Mr. Williams writes for American Forces Press Service.

DEFENSE DEPARTMENT TO SHARE SPECTRUM WITH FIRST-RESPONDERS

WASHINGTON (*Defense Department news release*) **–** The Defense Department told Congress in February that it's feasible to share the 138-144 megahertz band with public-safety users. A DoD Joint Spectrum Center engineering study identified ways sharing would be possible without interfering with DoD operations.

"We believe it's possible to share portions of the 138-144 mHz band with public-safety users on a limited, coordinated basis," said Steven Price, deputy assistant secretary of defense for spectrum and command, control and communications policy. "DoD is willing to work with National Telecommunications and Information Administration, state and local governments, and first-responders on a case-by-case basis to explore sharing the band for the common good.

"While the 138-144 mHz band continues to be critical in DoD's operations, the department has found it helpful in emergencies to share communication systems with other first-responders. A small number of channels may be shared on a regional basis when it's to the mutual benefit of DoD and public-safety officials," Price said.

DoD operations that would be affected if this band were interrupted through heavy use of too many channels would include air-surface-air; air-traffic control and ground-support functions at military airfields; tactical communications for close air support; land-mobile radios for sustaining installation infrastructure support; and LMRs and specialized equipment for training and test-range support. Other systems that would be affected include fire and security alarms, and hydrology and utility controls.

The National Defense Authorization Act for fiscal 2000 reclaimed for federal – primarily DoD – use three mHz in the 138-144 mHz band previously identified for reallocation for mixed federal government and non-federal government uses. However, in the fiscal 2001 authorization, Congress directed DoD, in cooperation with the Justice Department and NTIA, to pro-

vide an engineering study on spectrum sharing in the 138-144 mHz band with public-safety users.

John Stenbit, the assistant secretary of defense for command, control, communications and intelligence, submitted the report to the Senate Armed Services Committee and the House Armed Services Committee.

JSC's study showed that areas of operation associated with DoD frequency usage in the 138-144 mHz band encompass nearly the entire continental United States. Large distance separations would be required to prevent co-channel and adjacent-channel interference between DoD equipment and potential state and local public-safety systems, particularly in the case of DoD air-ground-air radios.

GLOBAL POSITIONING SYSTEM, OTHER MILITARY SYSTEMS PROTECTED BY FEDERAL COMMUNICATIONS COMMISSION DECISION

WASHINGTON (*Defense Department news release*) **–** The Federal Communications Commission's Feb. 14 decision authorizing use of ultra-wideband devices above 3.1 gigahertz and imposing strict technical limits below 3.1 gHz continues to protect critical, spectrum-dependent military systems including the Global Positioning Satellite system, a Department of Defense official said.

Steven Price, deputy assistant secretary of defense for spectrum and command, control and communications policy, said, "DoD supports FCC's reasoned and balanced approach of protecting critical national-security systems from frequency interference while allowing commercial deployment of new technologies. DoD appreciates the leadership efforts of the National Telecommunications and Information Administration – the agency with lead responsibility for managing federal-government spectrum – ensuring mission-critical operations are not jeopardized. We concluded the FCC's technical restrictions on UWB devices would be enough to protect military systems. Such restrictions were the minimum required to avoid interference with those systems."

Price said that DoD intends to monitor regulatory and market developments to ensure national security is maintained and that UWB devices, as deployed, don't jeopardize mission-critical operations supporting public safety, national security and homeland defense.

DEFENSE BUDGET INCLUDES $94 BILLION FOR MILITARY PAY, ALLOWANCES

by Linda Kozaryn

WASHINGTON – "Smart weapons are worthless unless they're in the hands of smart, well-trained, highly motivated soldiers, sailors, airmen and Marines," Defense Secretary Donald Rumsfeld told members of the House Armed Services Committee in February.

"If we're to win the war on terror and prepare for tomorrow, we have to take care of our greatest assets, the people in the (defense) department," he said.

Rumsfeld said the proposed fiscal 2003 defense-budget request of $379 billion includes $94 billion for military pay and allowances. This would give service members a 4.1 percent across-the-board pay raise, and mid-grade service members would get another $300 million in targeted pay increases.

"We're competing with the private sector for the best young people in our country," Rumsfeld said. "We can't simply count on their patriotism and their willingness to sacrifice alone."

The proposed budget also includes $4.2 billion to improve military housing. This would put the department on track to eliminate most substandard housing by 2007, Rumsfeld said. This is three years sooner than originally forecast.

Money is also allocated to reduce out-of-pocket housing costs for service members living off base from 11.3 percent today down to 7.5 percent in 2003. This would put the department on the track to eliminate it by 2005, he said.

About $10 billion would go for education, training and recruitment, he said, "and a breathtaking $18.8 billion to cover realistic costs for military health care."

Anyone who visits America's troops "can't help but come away with just enormous confidence in their dedication, their patriotism, their confidence, the training they've had and the very high state of morale they bring to the important work they're doing," Rumsfeld told committee members.

"They put their lives at risk for our country, and we all are deeply appreciative and grateful to them," he said.

Ms. Kozaryn writes for American Forces Information Service.

COMMUNICATIONS SHELTERS RECEIVE OVERHAUL THROUGH PARTNERSHIP WITH CONTRACTOR

by Anthony Ricchiazzi

TOBYHANNA ARMY DEPOT, Pa. – Tobyhanna is teamed with General Dynamics in its mission to overhaul hundreds of S-250 mobile-subscriber equipment shelters.

The work began last year to strip and repair eight versions of the MSE shelters, which contain communications-electronics equipment installed by General Dynamics and are mounted on humvees.

MSE interfaces with troposphere and satellite-communications systems to link them together. Different types of phones and radios can be routed through the MSE system, which acts as an operations and switching center. MSE is also capable of routing data and facsimile traffic.

Fifteen employees working in teams of three repair everything from leaking roofs to installing racks and door seals. After inspection, the shelters and racks go to another team for painting.

Tobyhanna overhauled 92 shelters last year, says production controller Bob Moore, Production Management Directorate. About 80 are scheduled for this year.

"We'll complete about 80 a year from 2003 through 2008," he said.

The toughest challenge for Tobyhanna is meeting the schedule requirement of five shelters per week.

"We have a 30-day turnaround from the date we receive a shelter to

finish it on time," said Jerry Sulima, chief, Sheet Metal Structural Repair Division. "We've built a good working and teaming relationship with General Dynamics over the first year's contract and kept within budget requirements."

General Dynamics conducted the first-article tests at Tobyhanna with Tobyhanna and Communications-Electronics Command personnel. Sulima said they did a thorough inspection; Tobyhanna passed and was given the go-ahead to complete the rest of the shelters.

"Minor problems were worked out through e-mail," said Joe Symuleski, a sheet-metal mechanic leader in Tobyhanna's Systems Integration Directorate. "We've had nothing but good reports at meetings. This is the first time General Dynamics has teamed with a depot for this type of work, and they are very pleased with the results."

Tobyhanna finished shipping the second group of shelters to General Dynamics March 21.

Mr. Ricchiazzi is a public-affairs specialist assigned to Tobyhanna's Public Affairs Office.

UPDATES

'KNOWLEDGE WARRIORS' AMASS AT SYMPOSIUM

by Patrick Swan

KANSAS CITY (*Army News Service*) – More than 500 warfighters, functional experts and information-technology professionals – dubbed "knowledge warriors" by the Army's chief information officer – massed forces here April 1-4 for the second annual knowledge symposium.

The symposium covered a wide range of issues, including how to use knowledge concepts when designing systems and tools necessary in the Objective Force environment, said COL Jane Maliszewski, lead symposium organizer. Some of the nation's top knowledge-management professionals shared lessons-learned on how their companies have used KM to improve performance and dramatically increase their competitive edge, she said.

The symposium was sponsored by the Army's CIO/G-6, LTG Peter Cuviello, along with the Center for Army Lessons Learned and the Association of the United States Army.

"Next to building the Objective Force, information superiority is our Army's next highest priority," said Cuviello in his welcoming address. "KM isn't about centralizing authority. It may start from the top, but we execute it from anywhere in the Army. We must all be on board to make this work. The Army, run as an enterprise, is our mission focus."

SFC Gerald Ecker said he found useful the knowledge-sharing theories and philosophies discussed at the symposium.

"We need to grow leaders who are deeply rooted in this knowledge culture," said Ecker, the medical noncommissioned officer for Project Warrior in the Army Medical Department's lessons-learned office at Fort Sam Houston, Texas.

"We have the technology and we should exploit it," Ecker said. "I'm not a technical guy, but I understand we should use every resource at our disposal to win our nation's wars. When we leverage technology to spread knowledge, we can also save soldiers' lives on the battlefield. We have weapons for mass destruction; we should use knowledge-sharing for mass potential. I believe in the 'train-the-trainer' mentality: the more NCOs learn about KM, the more credibility – and usefulness – this concept will have."

"This is all about sharing knowledge so soldiers can do their jobs better," said CSM Cynthia Pritchett of the Combined Arms Center and Fort Leavenworth, Kan. "Soldiers want to know what's going on. They don't want to reinvent the wheel to address problems that someone else has already solved."

In an effort to help soldiers share knowledge more effectively, COL Robert Coxe, the Army's chief technical officer, CIO/G-6, unveiled the new Enterprise Collaboration Center for the Army portal (www.us.army.mil).

"ECC is now operational," he said. "Soldiers staffing a requirement or issue can now post documents to a dedicated site on Army Knowledge On-line rather than send huge files to many addresses via e-mail. This will unclog the e-mail pipelines, so to speak, and allow soldiers to set up their own collaborative groups based on mission need rather than organizational structure."

John Garstke, the assistant director for concepts and operations at the Defense Department's office for force transformation, briefed attendees on strategies for leveraging a knowledge advantage in network-centric operations.

"Technology is enabling us to be a transformed, network-centric force operating in the three domains of warfare," Garstke said. Those domains are physical, informational and cognitive.

"Our soldiers and equipment operate in the physical domain," Garstke said. "The information they need for battle is created, manipulated and shared in the informational domain. But, to succeed in network-centric warfare, we must transform our operations into the cognitive domain, where our force has the capability to develop and share high-quality situation awareness. Through the cognitive domain, we must give our force the ability to develop a shared knowledge of commanders' intent and the capability to self-synchronize its operations."

In his keynote dinner address April 2, retired GEN Gordon Sullivan praised attendees as moving in the right direction.

"You are applying KM to real tasks completed by real people," said Sullivan, a former Army chief of staff and current president of AUSA. "You are using knowledge to develop a common base of understanding. This allows you to move knowledge around so you can share lessons-learned through the Army. This ultimately allows you to successfully fight and win our nation's wars."

Following Sullivan's remarks, Cuviello presented the first Army knowledge awards to nine representatives from various Army activities. Army knowledge awards covered the

following categories: best business practice, best electronic Army initiative, best community of practice, best e-learning initiative, best transformation innovation, most innovative KM initiative and best overall KM program.

Mr. Swan is public-affairs liaison to the CIO/G-6.

PRESIDENT CREATES HOMELAND SECURITY ADVISORY SYSTEM

by Linda Kozaryn

WASHINGTON–Federal, state and local authorities, law-enforcement agents and the American people need to know about terrorist threats as quickly as possible.

To ensure that happens, President George W. Bush signed a directive March 12 creating the Homeland Security Advisory System. White House officials say the system is the foundation for building an effective communications structure.

Part of a series of initiatives to improve coordination and communication in the fight against terrorism, the advisory system would provide a national framework for federal, state and local governments and private industry, allowing officials to communicate the nature and degree of terrorist threats.

Government officials would determine if a threat is credible and whether it has been corroborated. They'd also determine the gravity of the threat and whether it is specific and imminent.

Government officials would also characterize levels of vigilance, preparedness and readiness in a series of graduated threat conditions. These threat conditions would help federal, state and local government officials, law-enforcement agents and citizens decide what action they could take to help counter and respond to terrorist activity.

Based on the threat level, federal agencies would then implement protective measures the government and private sector would take to reduce vulnerabilities. States and localities would be encouraged to adopt compatible systems.

The advisory system would also include public announcements of threat advisories and alerts and inform people about government steps to counter the threat. The announcements would also provide information to help people respond to the threat.

Heightened threat conditions could be declared for the entire nation, for a specific geographic area or for a functional or industrial sector, White House officials said. Officials would use a color-coded system: conditions green, blue, yellow, orange and red.

Condition Green would indicate a low threat of terrorist attack. Government and law enforcement authorities would refine and exercise protective-measure plans and regularly assess facilities for vulnerabilities and taking steps to reduce them.

Condition Blue would indicate a general risk of terrorist attack. Among other precautions, authorities would check communications with emergency-response and command locations. They would also review and update emergency-response procedures and provide the public with necessary information.

Condition Yellow would indicate significant risk of terrorist attacks. Protective measures would include increasing surveillance of critical locations; coordinating emergency plans with nearby jurisdictions; and implementing contingency and emergency response plans, as appropriate.

Condition Orange would indicate a high risk of terrorist attacks. Authorities would coordinate security efforts with armed forces or law-enforcement agencies, and they would prepare to work at an alternate site or with a dispersed workforce and restrict access to essential personnel only. More precautions would be taken at public events.

Condition Red would indicate severe risk of terrorist attacks. In this case, emergency-response personnel would be assigned, and specially trained teams would be prepositioned. Authorities would monitor, redirect or constrain transportation systems, close public and government facilities and increase or redirect personnel to address critical emergency needs.

The president has given the attorney general responsibility for developing, implementing and managing the Homeland Security Advisory System. Government and law-enforcement officials and the public will have 45 days to comment on the plan. Ninety days later, in coordination with the Office of Homeland Security, the attorney general will present a system to the president for approval.

Ms. Kozaryn writes for American Forces Press Service.

'SMART CARD' TECHNOLOGY ENHANCES READINESS, SECURITY

by Gerry Gilmore

WASHINGTON–Implementation of "smart card" technology across the Defense Department by 2003 will enable the department to deploy troops faster and safeguard its people and facilities better, the card's program manager said March 5.

DoD's common-access card is a plastic identification card with an embedded 32-kilobyte memory chip, said Mary Dixon, director of DoD's Access Card Office. The card has already been issued at many stateside and overseas locales; about this time next year, 4 million active-duty military, selected reservists, DoD civilians and eligible contractor employees are expected to have them, she noted.

The card and stored data can be tied into computer networks for personnel actions and added security. It has proven its worth in speeding troop-processing times during recent testing at Schofield Barracks, Hawaii, Dixon noted. The 25th Infantry Division troops there once had to spend one or more days preparing for deployments using paper records, she said.

The cards reduced deployment-processing times to about an hour or two for each individual who took part in the test, Dixon remarked. And besides getting troops to the front faster, she noted, common-access cards could save time in a number of other ways.

"We're returning that time to the units – they can use it for training," she explained.

Security concerns across DoD

have been greatly heightened because of the Sept. 11, 2001, terrorist attacks, Dixon noted. Widespread use of smart-card technology for identification purposes will also enhance DoD's security infrastructure, she noted.

Personal-identification numbers today, and biometric data such as fingerprints in the future, can be contained on the card, making it much more secure than paper IDs, Dixon said.

"There is a one-in-a-million chance you might guess a person's six-digit PIN," she explained, adding that the card automatically locks up to deny access after receiving three incorrect PINs.

Widespread use of common-access cards should bolster security for DoD's people, buildings and facilities, Dixon noted. The new technology, she added, also allows a "one-card-fits-all" system, so IDs, Public Key Infrastructure tokens and multiple security passes could be melded onto one card.

Unlike easily duplicated paper ID cards, common-access cards – with their one-of-a-kind computer chips and embedded biometric data – can facilitate secure access into a sophisticated computer security network, Dixon explained.

If a common-access card is lost or stolen, she noted, the identification and security accesses on the card can be invalidated immediately. Biometric information already in the card's computer database, she added, would be checked when a request is made for a replacement card.

Issuance of common-access cards contains myriad checks and balances to ensure integrity, Dixon noted. A fraudulently issued card might conceivably get past security officials at first but definitely not for long, she said.

Mr. Gilmore writes for American Forces Press Service.

FIRSTGOV OPENS DIGITAL PORTAL TO FEDERAL AGENCIES

by SFC Kathleen Rhem

WASHINGTON – The federal government's redesigned web portal FirstGov (http://firstgov.gov) provides countless links that any Internet surfer might find useful.

FirstGov now is faster and more accurate than the pilot version in connecting visitors with the transactions, services and information they want, according to site managers in announcing the redesigned site's Feb. 27 launch.

Access is easy. The site is named FirstGov, but the web address is a non-case-sensitive "firstgov.gov." You don't even need to type "www." unless it's too old a habit or unless you're using an old browser.

Military members might find the search engine on the left side of FirstGov's homepage particularly helpful. It can call up any state's official Internet site. Service members and their families can find information on state taxes and motor-vehicle-registration requirements.

Many states offer veterans benefits that are in addition to the federal government's. Education and burial benefits, state-government veterans' employment preferences and job-training assistance are other possible state web topics.

On FirstGov's homepage under the heading "Online Services for Citizens" is a link titled "Change Your Address." Service members moving from one duty station to another can change their address with the U.S. Postal Service via an on-line form for $1, or they can print the appropriate forms free and mail or take them to their local post office.

The Postal Service site links to many other government and private services available to get settled in a new location. Links to government services, for instance, include emergency numbers, schools, senior-citizens programs, the Better Business Bureau and local Departments of Motor Vehicles. Links to civilian services include telephone and utility companies and Internet-service providers.

Other FirstGov site links provide federal forms and regulations, directories for federal agencies, military-personnel-locator information and even links to copies of the U.S. Constitution and Declaration of Independence.

Click on the homepage's "Laws and Regulations" link and then the "Statistics Gateway (FedStats)" link. You'll gain access to an alphabetical listing of all the statistics kept by various government agencies. You can also find links to pages designed for children that several government agencies maintain.

If all else fails and you can't find what you're looking for, the FirstGov main page includes a search engine that reaches out to all federal and state government Internet sites.

SFC Rhem writes for American Forces Press Service.

LEADER TRANSITIONS

SIGNAL GENERALS REASSIGNED

The Army's Chief of Staff, GEN Eric Shinseki, recently announced new jobs for four Signal brigadier generals. One of them has also been selected to receive her second star, Shinseki announced June 4.

BG Marilyn Quagliotti received the nod for major general and is being assigned as deputy director for operations, Defense Information Systems Agency, Arlington, Va. Quagliotti is dual-hatted as 5th Signal Command's commander and deputy chief of staff for information management, U.S. Army Europe and Seventh Army, Mannheim, Germany.

BG Carroll Pollett has been reassigned to succeed Quagliotti at 5th Signal Command, while Quagliotti will replace Pollett at DISA.

BG Edwin Spain III, 359th Signal Brigade's commander, will become vice director of information systems for command, control, communications and computers (individual mobilization augmentee) in the office of the secretary of the Army, Washington. The 359th is a U.S. Army Reserve unit located at the Signal Center, Fort Gordon, Ga.

BG Janet Hicks has been selected as the new Chief of Signal / Signal Center and Fort Gordon commander, replacing MG Pat Cavanaugh, who is slated to retire in September. Hicks is director of C4 (J-6), U.S. Pacific Command, Camp H.M. Smith, Hawaii.

Specific report dates aren't yet set.

BRIGADE SALUTES LATE CSM

by Bill McPherson

Figure 15. CSM Samuel Smith.

FORT SHAFTER, Hawaii – About 250 friends and co-workers of the late retired CSM Samuel "Mac" Smith attended a 516th Signal Brigade-sponsored sunset memorial service here March 7. Smith's wife Joan and her sister, sister-in-law and niece were special guests.

Smith, who had served as 516th's command sergeant major from June 1992 through March 1996, died Jan. 29 in Griffin, Ga., at age 56.

Eulogies were given by BG Jan Hicks, John Thorpe, Rev. Phil Terry, retired Adm. Dick Macke and retired COL Frank Rawlerson, former 516th commander and Smith's friend.

"I was always impressed to hear Mac express his love for the Army and his place in it, as he uttered his favorite philosophy several times a week to co-workers: 'Every day is a holiday, and every meal a picnic,'" Thorpe said. "These oft-repeated words indicated that Mac genuinely loved being a soldier throughout his 30-year military career. To him, his career as a senior noncommissioned officer and leader in the Army wasn't a job, but a profession, and he was so ***proud*** to serve his country."

When Smith retired as 516th Signal Brigade's command sergeant major in April 1996 after 30 years of Army service, a speaker at his retirement dinner took note of his leadership and expertise, but also his sense of humor. Smith's technical talent in the areas of communications and automation was well-known throughout the Army, dating back to 1986 when he was Fort Gordon, Ga.'s Army Computer Science School's sergeant major, responsible for all enlisted training that included eight courses and averaged about 1,400 students annually.

Smith entered the Army in February 1966 from Atlanta, Ga. His career included assignments as sergeant major at the Force Integration Staff Office, 24th Infantry Division (Mechanized), Fort Benning, Ga., as well as service in Vietnam, Korea and the Defense Communications Agency in Europe. Other stateside assignments included Fort McPherson, Ga.; Fort Stewart, Ga.; Fort Lee, Va.; Fort Benjamin Harrison, Ind.; and Fort Bliss, Texas.

Among his awards and decorations were the Legion of Merit, five Meritorious Service Medals and nine Good Conduct Medals. The Signal Corps Regimental Association awarded Smith both the Bronze and Silver Orders of Mercury. In 1999 the Chief of Signal, then-MG Peter Cuviello, inducted Smith as a Distinguished Member of the Regiment.

Following his retirement from active duty, Smith was employed as an engineer with Wheat International Communications in Honolulu. He was an elder of the Pearl Harbor Church of Christ, Pearl City, Hawaii.

Mr. McPherson is 516th Signal Brigade's public-affairs officer. Some information excerpted from Smith's Distinguished Member of the Regiment biography, available on-line at www.gordon.army.mil/regtmktg/index.htm.

SIGNAL UNITS

11TH SIGNAL BRIGADE FIRST TO FIELD NEW COMMUNICATIONS EQUIPMENT

by SSG Tim Volkert

FORT HUACHUCA, Ariz. – Soldiers from 11th Signal Brigade here are the first to train with and man a new communications system that will greatly increase the speed at which information travels across the battlefield.

A five-soldier team from 40th Signal Battalion, 11th Signal Brigade, completed its training and testing exercises in late June on the Theater Injection Point system, the latest evolution of satellite communications.

The TIP is a transportable satellite-broadcast system mounted on two humvees that will enable one-way communication to travel at a bandwidth much greater than the conventional SATCOM used on the battlefield today, said James Patterson, the TIP instructor.

This new system will operate with the Global Broadcast Service and will supplement the current tactical-satellite systems the Army uses, said SPC Mayo Vandyck, a SATCOM operator and maintainer with 40th Signal Battalion. Vandyck is a member of the brigade team learning how to operate the system.

Brigade soldiers training on the new system include SATCOM systems operators and maintainers and information-systems operators and analysts.

The TIP will operate with a concept similar to satellite television, he said. A theater commander will decide what programs, files and other information he will need to send to units under his command. That information will be scheduled into the TIP and then the satellite will send only that specific information to the designated units. The TIP will then send the information to the subordinate units via a Receive Broadcast Manager, which is a receiver that is a little larger than a personal computer, Vandyck said. These RBMs will then be connected into the tactical command post's local-area networks so the information can be disseminated as needed at the local level throughout the CP.

This is where the TIP's technology is a great improvement over current technology used in the field, he said. The theater commander can decide which unit needs specific information and can target individual computers. When the information is sent out from the TIP, only the designated computers will receive that information.

TACSAT systems used in the field currently have to combine all voice, video and data information into one stream to send it to a satellite. The people who need information have to

Figure 16. SPC Mayo Vandyck from 40th Signal Battalion ensures cables are tight during the power-balancing procedure before operating equipment in the Transportable Theater Injector. The TTI provides the satellite connection for the Theater Injection Point, the new communications equipment 11th Signal Brigade soldiers are training to operate.

download the entire stream and then filter out what they need, said John Warren, another TIP instructor.

Because the TIP will use a different satellite system to transmit and has a greater bandwidth, it will reduce the time needed to transmit information faster, eliminate the time needed to filter information and free up large amounts of space on the TACSAT's system, he said.

Vandyck said the TIP can handle up to 23 megabits per second, while the brigade's largest TACSAT systems can run at a maximum of only about 4.5 mbps.

Because of the enormous increase in speed and capability to handle large amounts of information, the TIP will be able to send large files, such as detailed maps, photos, video and other information much quicker than a tactical satellite, he said. Use of the TIP will free up the tactical communications resources, which will in turn increase the tactical system's ability to more efficiently handle the daily nonsecure and secure internet, teleconferencing and voice communications, Vandyck said.

Although this is new technology, Patterson said that it's not revolutionizing Army communications – it's just the next step in its evolution.

"It's not revolutionary, it's evolutionary," he said. "It's another tool in the toolbox, one that really didn't exist before."

The 40th Signal Battalion's soldiers completed their training at Fort Huachuca's Electronic Proving Ground in early May, said JoAnn Robinson, the GBS developmental test officer at EPG. The soldiers were then involved in two test exercises, which EPG's developmental tester conducted: the first at Huachuca in May, and the second exercise at MacDill AFB in Tampa, Fla., in June.

Robinson said the Military Satellite Communications system project manager anticipated fielding the first TIP to 11th Signal Brigade after the exercises. Plans include fielding two more TIP systems in the Army inventory. The dates for implementing and training this equipment haven't been released.

SSG Volkert is assigned to 11th Signal Brigade's Public Affairs Office at Fort Huachuca.

FORT BUCKNER AUTOMATES ITS TECH-CONTROL MISSION WITH STATE-OF-THE-ART SWITCH

by Michael Bennett

FORT BUCKNER, Okinawa, Japan – 58th Signal Battalion's 333d Signal Company just completed the third phase of a project to automate the Fort Buckner Technical Control Facility and 12 remote Defense Information System Network sites.

Fort Buckner is using the state-of-the-art InRange 2700 Matrix switch to automate the operations and management of more than 2,000 DISN circuits on Okinawa.

"The Matrix switch represents the latest technology in telecommunications that enhances the 333d's important mission of maintaining and operating all DISN circuits and systems on Okinawa," said CPT Sonise Lumbaca, company commander.

"The Matrix switch provides the ability to remotely test, monitor and troubleshoot DISN circuits at all Okinawa sites from the Fort Buckner Technical Control Facility," Lumbaca explained. "This saves valuable travel time during circuit testing and results in improved service for the more than 35,000 warfighters and DISN customers that 333d Signal Company services."

The new switch also eliminates miles of signal cable, reduces the number of wiring frames and makes patch panels obsolete, she said.

"Instead of manually accessing circuits with patch panels, soldiers now use modern computer work stations to test circuits," Lumbaca noted. "The result is better customer service."

The first phase of the Matrix switch project was completed in July 1999, when the first 4096 port Matrix switch was installed in the Fort Buckner Technical Control Facility. In July 2000 under Phase II, remote Matrix switches were installed at four bases: Torii Station, Camp Courtney, Camp Kinser and Futenma Air Base. In October 2001, the third phase of this project automated the remote DISN sites at Naha, White Beach, Camp Hansen and Camp Schwab.

The final phase of this project

Figure 17. PFC Ronald Cohen, left, and SGT Zachary Parks monitor network activity at the Fort Buckner Technical Control Facility.

will begin this year, providing matrix switches at Camp Foster, Awase, Yaedake and Camp Gonsalves.

Automation of the Okinawa Technical Control sites is managed by the product manager, Defense Wide Transmission Systems, Fort Monmouth, N.J., and the engineering is contracted to SAIC of Sierra Vista, Ariz.

"What makes this project unique is that the soldiers of 333d Signal Company are performing much of the installation and testing of the Matrix switch equipment," Lumbaca said.

From July to December 2001, three soldiers of the Technical Control Maintenance Section – SGT Van Abad, SPC Jonathan Smith and SPC Bobby Flowers – worked with SAIC engineers and installed all four remote matrix switches. "This joint effort keeps the project cost down and enhances the training and experience of 333d's soldiers," Lumbaca added.

In addition to their installation efforts, 333d Signal Company designed, installed and configured a wide-area network to control the remote Matrix switches from Fort Buckner. Charles Clayton, SGT Jeremy Lewis and SGT Zachary Parks applied their knowledge of Cisco router networking to design the network from scratch and develop a secure, survivable ring with enough bandwidth to meet mission requirements.

According to SFC Patrick Depape, noncommissioned officer-in-charge of the Fort Buckner Technical Control Section, "Without a WAN for control, the remote Matrix switches would be isolated from the main Fort Buckner switch, so the tech controllers showed great initiative and technical skill in making the WAN a reality."

"The hard work and dedication of 333d Signal Company's soldiers and civilians have enabled the Fort Buckner Technical Control Facility to apply state-of-the-art Matrix switch technology to the DISN mission," Depape continued. "Their installation and system administration efforts in support of the program manager have saved the government money and kept the multi-phase project on schedule. The joint partnership among the PM, contractors and soldiers is a good example of how projects can work to improve customer service. And the customers of the Okinawa DISN will benefit!"

Mr. Bennett is technical director for 333d Signal Company.

507TH FINISHES $25 MILLION UPGRADE AT WAINWRIGHT

by CPT Dean Denter

FORT WAINWRIGHT, Alaska – An outdoor ribbon-cutting ceremony Oct. 25, 2001, at just below zero degrees officially marked completion of 507th Signal Company's $19.1 million outside-cable rehabilitation second contract, known as OSCAR II, and the $6.54 million common-user installation-transport network projects.

"Completion of OSCAR II has been a long, four-year journey with the limited digging season at Fort Wainwright," said Dave Henry, chief of the Fort Wainwright Dial Central Office and primary contracting-officer representative for the project, at the ceremony. Henry said that the upgrades and infrastructure OSCAR provided laid the groundwork for CUITN.

"By installing fiber and replacing the majority of copper cable on post, the OSCAR II project has laid a flexible framework that will serve Fort Wainwright well for any future changes and expansion," Henry explained. "General Dynamics, the prime contractor, installed 154 manholes, more than 30 miles of concrete-encased interduct, more than 62 miles of copper cables to buildings providing phone service to more than 5,700 customers, and more than 45 miles of fiberoptic cables."

Celine Johnson, chief of Fort Wainwright's local control center and CUITN project officer, said that by the end of 2001, 80 of 86 buildings were cut over to the new gigabit-Ethernet backbones. The other six buildings are undergoing construction and will be cut over later this year.

"Not only are users seeing an increase of 10-times-faster transmissions, but with the installation of fiber, we're now able to provide connectivity to areas on post that were out of range for copper-based network equipment," Johnson said. "Also, Lucent Technologies, the lead contractor on the project, will have a technician on-site for the length of the five-year system warrantee covering the equipment in two major communications nodes, five area distribution nodes and 86 end-user buildings."

CPT Denter commands 507th Signal Company at Fort Wainwright.

5TH SIGNAL COMMAND ESTABLISHES HISTORICAL COLLECTION

by Danny Johnson

MANNHEIM, Germany – Another chapter in 5th Signal Command's history happened April 19 as the command's historical collection opened in the command building at Funari Barracks here. BG Marilyn Quagliotti, 5th Signal Command's commander, cut the red, white and blue ribbon to officially "debut" the collection.

Figure 18. BG Marilyn Quagliotti, 5th Signal Command's commander, looks over the newly opened command historical collection which includes the Pitts Medal of Honor display. Danny Johnson (in suit), 5th Signal Command's historian and public-affairs officer, accompanies her.

The historical collection consists of displays and items such as telegraph keys, telephones, field telephones, radios, postcards, photographs, flags, insignia and uniforms related to the history of 5th Signal Command and the Signal Corps.

Of special interest is the Medal of Honor issued to 5th Signal Command by the Army on behalf of CPT Riley Pitts, for whom the command building at Funari Barracks is named. Pitts was awarded the Medal of Honor posthumously for his actions in October 1967 while assigned to 25th Infantry Division in Vietnam as an infantry officer. President Lyndon Johnson presented Pitts' family his Medal of Honor in December 1968.

Work started on 5th Signal Command's historical-collections project during Summer 2001. People both inside and outside of 5th Signal Command either loaned or donated items to get the effort underway.

The 5th Signal Command's collection will be the only U.S. Army Signal Corps type of museum within the European theater of operations. The museum is open to all visitors to the command as well as to current and former soldiers, civilians and contractors associated with 5th Signal Command.

Mr. Johnson is dual-hatted as 5th Signal Command's public-affairs officer and command historian. He serves as curator of the new museum and "welcomes any questions, comments, loans or donations." He may be contacted at DSN 380-5167 or e m a i l danny.johnson@hq.5sigcmd.army.mil.

KA-BOOM! 333D UNDERGOES DEMOLITION TRAINING

by CPT Sonise Lumbaca

TORII STATION, Okinawa, Japan – An unconventional training session Jan. 10 turned out to be a motivating experience for several soldiers from 333d Signal Company, 58th Signal Battalion.

They conducted improvised demolition and explosives training with the Operational Detachment Alpha-115 team, 1st Battalion, 1st Special Forces Group (Airborne), at the Camp Hansen Demolition Range.

After receiving an in-depth safety briefing from ODA's SFC Robert Slater, the range noncommissioned officer who was also one of two Special Forces engineers (demolition experts) on the team, 333d soldiers received safety equipment. Another engineer, SSG Brian Wood, was an assistant instructor.

The Signal soldiers were first instructed on how to use military demolitions for their conventional use. They were then taught how to improvise the use of the same charges to meet special demolition needs for which the right charge or piece of equipment wasn't available. After the instruction, 333d soldiers were able to get hands-on training in emplacement and detonation of the explosives.

"Each soldier was able to team up with a member from ODA-115 and receive one-on-one training," explained CPT Sonise Lumbaca, com-

Figure 19. PFC Chris Johnson, left, of 333d Signal Company and SFC Jeffrey Gafford, demolition NCO, wire a charge for daisy-chain claymore mines.

pany commander, who arranged for the special training and accompanied the group. "We received detailed instruction throughout the process of rigging, employing and detonating the explosives. Destruction was witnessed from a safe distance."

Lumbaca said the training was conducted using dynamite, Composition C4 and other improvised demolitions using shape and cratering charges, timber and metal-cutting charges, bangalore torpedoes and mortar rounds. The group was also able to "daisy-chain" claymore mines for use in a mechanical ambush.

"The soldiers of 333d enjoyed the opportunity to train with ODA-115 and the overall experience," Lumbaca noted. "From this training, we learned that unconventional training will continue to motivate soldiers to be the best that they can be. It also demonstrates the unlimited opportunities that are out there for them."

CPT Lumbaca is 333d Signal Company's commander.

Figure 20. Fort Richardson firefighter Rob Moore demonstrates the capabilities of a PACMERS-Alaska projected land-mobile radio.

ALASKA PLANS NEW MOBILE EMERGENCY RADIO SYSTEM

by Rich Garrett

FORT RICHARDSON, Alaska – Government agencies in Alaska are currently planning and developing an interoperable trunked radio-communication system based on national standards. The project, known as Pacific Mobile Emergency Radio System, is a U.S. Pacific Command-sponsored initiative for Hawaii and Alaska.

"This system will allow federal, state, local and military representatives to operate autonomously day-to-day and transition seamlessly to a fully interoperable, interagency communications network in the event of an emergency or disaster," said Dennis Greenwood of the U.S. Army Pacific G-6 staff, which is PACOM's executive agent for PACMERS.

Greenwood explained that with today's advanced land-mobile radio technology, participating agencies share the cost benefits of a common infrastructure that is spectrum efficient.

"PACMERS-Alaska was developed and designed to ensure first-responders have the tools necessary to communicate when responding to life-threatening incidents such as wild fires, avalanches and, more recently, potential acts of terrorism," said Rich Garrett, U.S. Army Alaska's project officer for PACMERS in Alaska.

"In the past, these emergencies and disasters were not easily addressed, due in part to the lack of interoperable radio communications, to aging, archaic radio systems and to the tremendous landmass between responding federal, state and local public-safety agencies," Garrett said.

"A significant benefit of this system will be that emergency responders can communicate with other government emergency-services providers without having to carry more radios or requesting complicated patches," Garrett added.

Garrett said that PACMERS-Alaska will facilitate initial implementation of Alaska's land-mobile-radio initiative, which will create the first statewide LMR system in the nation that's shared by the Defense Department, other federal agencies, the state and local municipalities.

"The initiative will enhance each agency's ability to respond to day-to-day, mutual-aid and emergency medical incidents more effectively," Garrett said. "Furthermore, the ability to support mutual homeland-defense initiatives, natural and manmade disasters will be greatly enhanced. Sharing a common radio infrastructure will eliminate duplications of capital-investment projects, reducing total radio-communication costs for all participating agencies."

Garrett said the initial phase of the PACMERS-Alaska program will also serve as Phase I of the ALMR initiative. The ALMR initiative is a four-phased approach to develop more than 85 communications sites that will provide about 4,000 square miles of radio coverage.

Phase I will replace nine existing sites, beginning with Fort Wainwright, then migrating to Fort Greely, Eielson AFB, COPE Thunder and four road sites between Fairbanks and Black Rapids, Alaska.

Phases II through IV will build on Phase I coverage by providing LMR communications service to Juneau, Kodiak, Barrow, Valdez and other key locations, as well as providing coverage to some 1,242 miles of primary roadway among Anchorage, Fairbanks and Tok, Alaska.

Mr. Garrett works for 59th Signal Battalion.

OF INTEREST

NEW 'BEETLE BAILEY' CHARACTER SIMILAR TO SIGNALEER

WASHINGTON (*American Forces Press Service*) – Mort Walker is

adding a new character to his famous comic strip "Beetle Bailey." Service members were invited to submit names for the new character.

The new character is an "always prepared, gadget-loving and quirky information-technology officer." Deadline for entries in the "name the tech officer" contest had to be received by May 20, so Signaleers may soon be seeing Walker's interpretation of them.

The "Beetle Bailey" distributor, King Features Syndicate, and Dell Computer Corp. were the contest's sponsors and will make a donation to the Fisher House Foundation. Fisher House Foundation is a national not-for-profit organization that has built 29 homes near major military and Veterans Affairs medical centers for use by families of patients receiving care. Fisher Houses have provided temporary lodging for more than 50,000 families since the foundation's inception in 1990.

'GODFATHER' OF THE RENEGADES CELEBRATES 55 YEARS OF FEDERAL SERVICE

by CPT Kevin Bosch

TORII STATION, Okinawa, Japan – The 405th Signal Company "Renegades" has one of the most experienced and dedicated civilians working for the federal government today. With more than 55 years of federal service to the United States, no one can argue with that statement.

Figure 21. Julian Antonio.

Julian Antonio, known affectionately within the company as the "the Godfather," is the accountable officer for the Project Support Activity and a true marvel that everyone should strive to emulate.

Antonio was born and raised in San Marcelino, Philippines. He began his military service with the U.S. Army March 5, 1946. He enlisted in the Army with the military occupational specialty 238, telephone construction lineman, and was assigned to 11th Signal Battalion, 532d Signal Company, on Okinawa, where he served until his Army tour ended Feb. 11, 1949. He then returned to the Philippines.

"In April 1949, I returned to Okinawa seeking federal employment with the U.S. government," Antonio recalled. "I was hired as a 'Third Country National' and assigned to 11th Signal Service Battalion as a telephone-construction lineman rated as D-13, which paid me all of 61 cents per hour.

"In October 1952, I switched jobs and became a property and supply clerk, working with the 8111th Army Unit, Headquarters, Ryukyus Command, Okinawa," Antonio added. "I was rated as GS-4, gaining an increase in pay to $1 per hour."

On March 26, 1956, Antonio married the former Mineko Uku, and to this union six children were born. In May 1959 Antonio was promoted to GS-5. In January 1960, promotion to GS-6 came his way. In January 1967, Antonio switched jobs again and became a general supply assistant, and with the switch came yet another promotion to GS-7.

"One of the happiest days in my life was Nov. 17, 1972, when I was granted American citizenship," Antonio said.

In April 1976, Antonio moved up the corporate ladder and was appointed as the accountable officer of the Project Support Activity, and on June 3, 1990, he was promoted to the grade of GS-9, which he holds today.

Antonio says he owes much of his success to the Army's training opportunities. Over the years, he has completed such courses as logistics-management information-systems training, Direct Standard Supply Support System, Managerial Theories from Central Texas College, U.S. Civilian Supervisor Course, Leadership Education and Development Course and the Standard Automated Bill of Materials course.

Among the awards Antonio earned are the World War II Victory Medal, Philippines Individual Ribbon, Army of Occupation Medal with Japan, Employee of the Year 1964 for U.S. Army Signal Group and 14 Sustained Superior Performance Awards. In April 1996, he received his award for 50 years of continued service to the federal government. In May 2001, Antonio received the Signal Corps Regimental Association's prestigious Bronze Order of Mercury for his outstanding contributions to the Signal Corps.

"Antonio's contributions to the Army and the Signal Corps have left an unmatched legacy of his devotion to duty and love of his country," observed LTC Leo Thrush, commander of 58th Signal Battalion. "He is a gentleman whom soldiers respect and commanders can depend on, and he always rises to the challenge. Antonio can put most 20-year-olds to shame with his energy and work ethic. The Renegades are certainly a better company because of him."

CPT Bosch commands 405th Signal Company.

COMPANY OFFERS FREE SOFTWARE TO MILITARY

HARRISON, Ark. – Digital Logistics based here is donating several of its specialized military Win9x / NT / 2000 / XP software applications. The free software is available from the company's "freebies" software page located at http://www.digitallogistics.com/freebies.htm, according to Bob Dalton, the company's president and a retired Army master sergeant.

"All these software programs are free to U.S. military personnel, units and commands of all services as well as to our allies," Dalton said. "Each comes with an InstallShield style of installation as well as an uninstall feature. This donation of our professional-grade software is our way of giving something back to our primary military customers who have been good to us over the years."

The software applications are "Field Safety Widgets," "Battle Staff Widgets," "Soldier Widgets," "Visual Food Service Production Schedule," "Visual 362," "Visual 1687" and "Visual Petroleum, Oil and Lubricant

Manager" (joint services version). The company's descriptions of its software and download web addresses are:

• "Field Safety Widgets" contains operations and field-safety utility items such as a wind-chill calculator (based on the recent National Weather Service revision), heat-index calculator, wet-bulb globe temperature-index calculator, dehydration / water consumption utility and wet globe temperature-index calculator (botsball device). The software application supports input and output of data in both metric and standard measurement systems. Download from ftp://ftp.digitallogistics.com/fldsafe.exe;

• "Battle Staff Widgets" contains specialized utility functions that battle-staff noncommissioned officers and officers may find helpful. Among the software's functions are a flash-to-bang calculator, countdown timer, triple-standard concertina requirements estimator, meals-ready-to-eat requirements estimator, water requirements estimator and an ice requirements estimator. Download at ftp://ftp.digitallogistics.com/staffwid.exe;

• "Soldier Widgets" contains functions that soldiers, NCOs and officers may find helpful in their day-to-day jobs. These functions include a metric converter, temperature converter, calendar containing military-interest information, "paper tape" calculator, local time clock that appears as an old-style military wall clock and a "stopwatch" style of timer that measures elapsed hours, minutes and seconds from start point. Download from ftp://ftp.digitallogistics.com/swidget.exe;

• "Visual Food Service Production Schedule" is designed for military food-service people to use while preparing the daily food-service production forms required by regulation for each prepared meal. Download at ftp://ftp.digitallogistics.com/vprodsch.exe;

• "Visual 362" is designed for U.S. military-logistics soldiers to use in generating an exact DD Form 362 (statement of charges) for their unit personnel through their computer system. Download from ftp://ftp.digitallogistics.com/vis362.exe;

• "Visual 1687" is designed for U.S. Army logistics people to use in generating an exact DA Form 1687 (notice of delegation) for their unit personnel through their computer system. Download at ftp://ftp.digitallogistics.com/vis1687.exe; and

• "Visual POL Manager" (joint services version is designed for U.S. military-logistics people charged with POL accounting and management responsibilities. Download from ftp://ftp.digitallogistics.com/vpolmgr.exe.

"These items are free with no strings attached and may be distributed to others as long as no charge of any kind is made for any of them," Dalton said. "All these software applications require a minimum screen resolution of 800x600 or better. Also, mention of us in the software has been kept very low key and in good taste so as not to offend anyone while they are in use on a military computer."

DEFENSE SECRETARY EXPLAINS PENTAGON BUZZWORDS

by Linda Kozaryn

WASHINGTON – Defense-based capabilities. Transformation. Force-sizing construct. Asymmetric threats. These are some of the latest buzzwords at the Pentagon.

What do they mean?

Defense Secretary Donald Rumsfeld used these terms during a Feb. 4 interview with Jim Lehrer on the Public Broadcasting System. The secretary talked about transforming the military, the president's fiscal 2003 budget request, the war on terrorism and other defense issues.

When Rumsfeld used the Pentagon buzzwords, Lehrer asked the secretary to explain. For example, when Rumsfeld said, "We've moved from a threat-based strategy to a capabilities-based strategy," Lehrer asked, "What does that mean?"

Rumsfeld explained.

"It means that instead of deciding you're going to look at a threat in North Korea or a threat in Iraq or a threat somewhere else (like) the old Soviet Union, and fashion your force to fit that, what you do is look at the capabilities that exist in the world – chemical, biological, nuclear capabilities, cyberattacks, that type of thing. And you say to yourself, it's not possible to know precisely where the threat will come from or when, but you can know what nature that threat might be and what capabilities we need to deal with that."

Transformation, according to Rumsfeld, "is not an event, it's a process. It involves a mindset, an attitude, a culture." He said it involves new ways of thinking, new ways of operating, new ways of doing business.

Transformation doesn't necessarily involve a new weapon system, the secretary said, but it might involve a better way of connecting existing weapon systems. It might involve a different way of organizing or fighting as U.S. forces did in Afghanistan. Instead of sending large numbers of ground troops to Afghanistan, the United States sent in air power and special-operations forces to support anti-Taliban fighters.

"When the Germans transformed their armed forces into the Blitzkreig," Rumsfeld said, "they tranformed only about 5 or 10 percent of their force. Everything else was the same, but they tranformed the way they used it – the connectivity between aircraft and forces on the ground, the concentration of it in a specific portion of the line."

"One would not want to transform 100 percent of your forces. You only need to transform a portion," he concluded.

Rumsfeld said the president's fiscal 2003 budget "reflects the priorities that are appropriate to our times."

Since national defense and homeland security are crucial right now in light of the Sept. 11, 2001, terrorist attacks, he said, that's where President George W. Bush wants to put the nation's money. At the same time, Rumsfeld said, Bush wants to hold down spending in other areas.

The president hasn't forgotten the folks who fly the planes, man the weapons and fight the battles, Rumsfeld added. There's money in the budget request for another military pay raise. "If there's anything that's central to the success of the armed forces," he said, "it's that the men and women be properly treated. These are

the people who voluntarily risk their lives for our country. And we need to have talented people capable of doing the important jobs and increasingly high-tech jobs."

Lehrer reminded Rumsfeld that before Sept. 11 changed the military's focus, the defense leader had expressed concern about how the Pentagon controlled its money. Is the structure in place to make sure this money is not wasted? Lehrer asked.

"I guess I would have to say after 11 months or so in the saddle that I'm encouraged," the secretary replied. "The Department of Defense has been characterized by a lot of people as being very difficult to change, resistant, set in its ways, but if you think back over the last 11 months, what's happened, we have a new defense strategy."

The military has a new "force-sizing construct," he said. In the past, the thinking was that the United States should be able to fight two major regional conflicts. Overwhelming U.S. forces would occupy the countries, take over the capitals and change the regimes. Defense officials were supposed to size the forces to ensure this could happen.

Defense leaders have changed that approach, Rumsfeld said, because the armed forces had too little airlift, too few forces, and "the world wasn't like that."

"We still have to be able to win two conflicts," he said, "but we only have to be able to occupy and change the regime in one while stopping the other, and in addition, be capable of engaging in the other lesser contingencies or non-combatant evacuation or an event like Kosovo."

So where does terrorism fit in this picture? Lehrer asked.

Rumsfeld said cruise and ballistic missiles, cyberattacks and other terrorist tools are "asymmetric threats." They are "ways of attacking the United States where they don't have to go straight after our armies or navies or air forces."

Terrorists can't directly attack the U.S. armed forces because the U.S. military is too capable, he said. So they go after perceived vulnerabilities such as information technology, or they turn America's own capabilities against us. U.S. officials couldn't foresee that the Al Qaeda would use box cutters to turn U.S. airliners filled with Americans into missiles.

The threat of future attacks of an even worse nature exists, Rumsfeld said. Several terrorist networks have active programs to acquire biological and chemical weapons as well as radiation and nuclear weapons.

"We've found intelligence in Afghanistan that attests to the enormous appetite and effort they've put into this," Rumsfeld said. "We don't know how successful they've been, but we know they want them, and we know there are countries that have them. The power of a biological weapon is something we have to be very respectful of as a country."

Countries that engage in terrorism or harbor terrorists pose a danger to the world, he said. Terrorists can attack anywhere, anytime using a range of techniques.

"It's physically impossible to defend at every time in every location against every conceivable technique of terrorism," the secretary stressed. "Therefore, if your goal is to stop terrorism, you must take the battle to the terrorists.

"They are planning. They are plotting," he said. "They have trained thousands of terrorists very well, and we have no choice but to find those people and root them out. … We have an obligation to try to find them."

Ms. Kozaryn writes for American Forces Press Service.

INTEL SATELLITES NEED MORE 'DWELL TIME'

by Gerry Gilmore

WASHINGTON – Military and civilian space specialists will seek ways to increase the amount of intelligence gathered by orbiting satellites as part of Defense Department efforts to integrate national-security space capabilities, the Air Force's No. 2 civilian said here Feb. 7.

Air Force Undersecretary Peter Teets told Pentagon reporters he's been tasked "to bring together the military and national elements of space to ensure we're providing the nation the best national-security capabilities while still being good stewards of the American tax dollar."

Teets, who also serves as director of the National Reconnaissance Office, will integrate recommendations of the Commission to Assess U.S. National Security Space Management and Organization, which Donald Rumsfeld chaired before being appointed secretary of defense. The commission recommended that DoD enhance military space technology and study ways to project power from space.

Teets said two new offices would be formed immediately under him as part of a reorganization: the deputy for military space and the deputy director of NRO. Other offices would handle acquisition, integration and military / civilian space issues.

A major goal of reorganizing space operations is to achieve what Teets termed "universal situation awareness" involving intelligence-gathering satellites.

"I think what we've found is that, moving ahead with this war on terrorism, ... it's going to be important for us to have persistent intelligence, universal in terms of time, but also universal in terms of space," Teets said.

He noted that satellite-intelligence collection capabilities over Afghanistan have been excellent. However, "We need to add persistence to the equation. You'd like to know all the time what's going on around the face of the globe. You'd like to have more 'long dwell,'" he added. Ways to achieve this more continuous view, Teets suggested, include orbiting more satellites or higher-flying ones that can survey a given area longer.

As NRO director, Teets is responsible for acquiring and operating all U.S. space-based reconnaissance and intelligence systems. This includes managing the national reconnaissance program, where he reports directly to the defense secretary and director of central intelligence.

Other space reorganization goals include joint-warfighting capability, integrated cultures, a cadre of space professionals and assured access and protection of space assets, Teets noted.

Mr. Gilmore writes for American Forces Press Service.

TOBYHANNA ENHANCES COMPATIBILITY OF SPECIAL FORCES SATELLITE SYSTEMS

by Anthony Ricchiazzi

TOBYHANNA ARMY DEPOT, Pa. – When Special Forces called for help with a communications problem, Tobyhanna provided the answer.

Employees here designed and built a transit-case prototype that allows Special Forces soldiers to communicate through different satellite systems.

"We were tasked [in August 2000] by the program manager of Communications-Electronics Command's Defense Communications and Army Transmission Systems to develop interoperability capability for satellite systems used in voice and data transmission," explained Ken Stackhouse, electronics technician, Satellite Communications Systems Directorate.

The prototype's electronics work by interfacing with user equipment via wire cabling and interfacing with satellite equipment via fiberoptic cables. Stackhouse said it's called a transit case because it's easily transported.

After meeting with U.S. Army Special Operations Command representatives to find out what they needed, a team began working to design a transit case from scratch. "We had to keep the case as small as possible to meet Special Forces mobility requirements," Stackhouse said. "We started in September 2000."

Their first prototype is a 32-inch deep x 34-inch tall x 27.5-inch wide transit case that weighs 125 pounds and contains commercial-off-the-shelf equipment, plus Tobyhanna-manufactured racks and brackets.

"The prototype effort was to prove that what they wanted could be accomplished," Stackhouse said. "We got it ready in December 2000, but the unit deployed, so it couldn't be tested until March 2001."

When the unit tested the case, they found it satisfactory, but asked Tobyhanna to remove components that were no longer necessary. The team is building a second prototype that will be 30 pounds lighter and five inches shorter.

"The second one is another proof-of-concept," Stackhouse said. "Once it's used, Special Forces will determine how many they want. Usually, it takes longer to go from design to working prototype. This project shows that when push comes to shove, Tobyhanna can do quick-reaction prototypes."

"Tobyhanna is doing a great job," said Robert Yee, DCATS program manager. "The users in Special Operations Command are happy because they can interface their satellite terminals with our baseband transit cases and communicate with minimum reconfiguration and a minimum amount of additional equipment the Special Forces units have to carry."

Figure 22. Dennis Green, a mechanical engineer in Tobyhanna Army Depot's Satellite Communications System Directorate, attaches a component of a communications transit case designed for Special Forces. The case allows soldiers to communicate via satellite terminals.

Mr. Ricchiazzi is a public-affairs specialist assigned to Tobyhanna's Public Affairs Office.

ARMY OFFICERS RECOGNIZED AS 'CHAMPIONS OF INNOVATION'

by Patrick Swan

WASHINGTON (*Army News Service*) – On a small budget of $20 a month, plus "lots of time and sweat," two Army officers have established a virtual officers' club that's earned them a place on a "champions of innovation" list.

Fast Company magazine selected them for inclusion on a list of 50 innovative leaders from a "global readers' challenge" that garnered more than 1,650 entries (and more than 10,000 comments on those entries) representing more than 30 countries, according to its website, http://www.fastcompany.com/fast50/.

MAJ Nate Allen and MAJ Tony Burgess were recognized for their leadership of CompanyCommand.com and PlatoonLeader.org. These user-driven websites facilitate the lateral sharing of knowledge among company-level leaders in the Army. The fast-growing sites currently attract more than 30,000 visitors and 1.5 million "hits" monthly.

"They are forums where Army leaders share knowledge and learn from others' experience," Allen said. "Leaders are accessing knowledge, sharing ideas and tapping into the experiences of others, helping to transform the Army into a learning organization."

In addition to leading the all-volunteer team of 25 officers who run the websites, Allen and Burgess have published a book on company-level leadership. They write a monthly company-level leadership newsletter and give leadership seminars at pre-command courses.

"What we're doing isn't about a website," said Burgess. "It's about connecting like-minded leaders who are passionate about building combat-ready teams."

Burgess said he and Allen set up CompanyCommand.com and PlatoonLeader.org for a simple reason: to fill a need.

"Even though all Army officers – literally thousands each year – com-

mand a platoon or company," Burgess told ***Fast Company*** magazine, "there was no system that allowed them to share what they were learning in real time laterally across the entire organization. When they left their jobs, so did their experience."

The websites provide a way to capture and share that experience, and to actually create new knowledge through on-line discussion forums.

"The Internet makes possible a virtual officers' club," said MAJ Steve Schweitzer, the site's webmaster. "We offer a non-time-sensitive, non-location-dependent discussion forum that soldiers can access from anywhere in the world."

Burgess said he isn't surprised by the success of Company Command.com.

"It makes sense that Army leaders would be passionately committed to figuring out and sharing what works," Burgess said. "We knew that if Army leaders could easily share their ideas and lessons-learned real time, they would enthusiastically do so. That is what professionals do."

The officers feel limited only by the resources they can dedicate to the effort. "Pulling this off with no funding other than our savings accounts and on our free time has definitely been our biggest obstacle," said Burgess.

"On the other hand," he added, "the fact that our work is totally grassroots has created a spirit of community that is downright inspirational."

Allen and Burgess believe their efforts support the leader-development portion of Army transformation.

"The potential to leverage this model of learning to affect Army transformation is huge," said Allen. "Leaders who come together to share knowledge can more quickly learn what they need to know, when they need to know it, making them more competent and adaptive."

"It's all about building combat-ready teams," added Burgess.

Allen and Burgess were among eight officers recognized at the April 1-4 Army Knowledge Symposium for building CompanyCommand.com into the most innovative knowledge-management initiative.

William Taylor and Alan Webber, ***Fast Company*** founding editors, said their goal in establishing the "champions of innovation" recognition was to "remind the world of all the good that gets created when passionate people with big ideas and strong convictions are determined to make a difference … to unleash the spirit of innovation, creativity, determination and struggle that moves the world forward – and to recognize leaders, teams and companies that are achieving extraordinary results."

Mr. Swan is a public-affairs liaison officer with the Army's chief information officer/G-6 office.

ACRONYM QUICKSCAN

AAME – Army Award for Maintenance Excellence
ADAPC – Alcohol and Drug Abuse Prevention and Control (program)
AKO – Army Knowledge On-line
ALMR – Alaska land-mobile radio
ASC – Army Signal Command
AUSA – Association of the United States Army
C2 – command and control
CALL – Center for Army Lessons Learned
CIO – chief information officer
CP – command post
CUITN – common-user installation-transport network
DA – Department of the Army
DCATS – (program manager for) Defense Communications and Army Transmission Systems
DISN – Defense Information System Network
DoD – Department of Defense
DOIM – Directorate of Information Management
ECC – Enterprise Collaboration Center
EPG – Electronic Proving Ground
FCC – Federal Communications Commission
FORSCOM – Forces Command
GBS – Global Broadcast Service
GEICO – Government Employees Insurance Company
Ghz – gigahertz
I3A – installation information-infrastructure architecture
IBCT – Initial Brigade Combat Team
ICSS – Installation Crisis Support System
ID – identification
JFCOM – U.S. Joint Forces Command
JSC – Joint Spectrum Center
KM – knowledge management
LCC – local control center
LMR – land-mobile radio
MACOM – major command
Mbps – megabits per second
Mhz – megahertz
MSE – mobile-subscriber equipment
MTOE – Modified Table of Organization and Equipment
NATO – North Atlantic Treaty Organization
NCO – noncommissioned officer
NORAD – North American Aerospace Defense Command
NORTHCOM – U.S. Northern Command
NRO – National Reconnaissance Office
NTIA – National Telecommunications and Information Administration
ODA – Operational Detachment Alpha
OSCAR – outside-cable rehabilitation
PACMERS – Pacific Mobile Emergency Radio System
PACOM – U.S. Pacific Command
PIN – personal-identification number
PM – product manager
POL – petroleum, oil and lubricant
RBM – Receive Broadcast Manager
SATCOM – satellite communications
SoD – secretary of defense
TACSAT – tactical satellite
TDA – Table of Distribution and Allowances
TIP – Theater Injection Point
UPL – unit prevention leader
USARAK – U.S. Army Alaska
USARPAC – U.S. Army Pacific
UWB – ultra-wideband
WAN – wide-area network
WKN – Warrior Knowledge Network

Army Transformation Wargame 2002:

Objective Force communications in global conflict

by Geoffrey Wells and Donald Paul

In a 2020 setting of worldwide conflict and political tension, the 2002 edition of the Army Transformation Wargame provided senior Army leaders an opportunity to analyze Objective Force capabilities in a joint environment. At the same time, the game offered a wargaming team from the Signal Center a realistic and demanding set of requirements against which the success of the proposed OF communications architecture could be measured. Overall, the results were positive, but the game also highlighted cautions.

Transformation wargame

The third annual Army Transformation Wargame was conducted April 21-26 at the Army War College in Carlisle, Pa. The wargame was designed to examine the United States' ability to respond to multiple crises in a global environment and to study the strategic value of land power in a joint, combined and interagency context. The game also looked at, for the first time, the strategic role of OF units of employment (division and corps equivalents) in a joint context.

As the Army's transformation effort has moved forward, the annual wargames have offered both strategic and multiservice settings in which key concepts could be explored. In previous games, the scenario was limited to a single region or conflict. This year, Training and Doctrine Command wargamers built a global scenario designed to stretch America's military resources and stress the ability of service leaders to command-and-control forces engaged in missions across the full spectrum of warfare.

Spanning the globe, the 2002 wargame included scenarios ranging from a major contingency operation in the Caspian region to humanitarian assistance, peacekeeping and a small-scale contingency operation in the Southwest Pacific. Added to these were continuing support of the North Atlantic Treaty Organization in the Balkans, a border dispute in Northeast Asia and counter-drug operations in Latin America. For the first time, homeland security played a significant role in the game.

More than 470 players and analysts filled the Army War College's Collins Hall as the game began. The cast included a large number of players from sister services and other government agencies, allied armies and all the TRADOC school commandants.

MG John Cavanaugh, Signal Center commandant, provided guidance and insight on communication issues as a member of the game's global-strategic team. Other players from the Signal Center's Directorate of Combat Developments handled communications staffing for the Caspian and Southwest Pacific force-on-force (Blue and Red) teams and served as a member of the homeland security panel. The Communications-Electronics Command's Research, Development and Engineering Center provided continuity by assigning a veteran of two previous transformation wargames to the Signal Center team.

Blue communications architecture

Blue forces had successfully played advanced communications architectures, primarily drawn from RDEC's Army After Next work, in previous iterations of the transformation wargame. In the 2002 game, the Blue 2020 communications architecture was based on the revised objective Warfighter Information Network-Tactical and Joint Tactical Radio System. This advanced multitiered architecture, featuring self-configuring and self-healing capabilities, provided secure, wireless, high-speed digital communications service to all echelons on the battlefield.

The terrestrial level, embedded in user platforms, simplified force deployment, provided immediate network access and enabled automatic reconfiguration of the network as ground forces maneuvered.

The space and airborne tiers allowed the traditional network "backbone" to be moved into the sky. In addition to high-altitude unmanned relays, the airborne layer contained manned and unmanned aerial-relay platforms organic to the deployed forces. Operating at a variety of altitudes, these relays gave commanders the ability to adjust coverage at critical points on the battlefield.

This vertical portion of the architecture provided range extension and alternate routing of information for the widely dispersed and fast-moving ground elements. It also afforded a means for deployed forces to reach theater and strategic sustaining bases. Most importantly, this "backbone," so essential to the network's functioning, could be moved into position prior to force deployment, ensuring availability of network services as forces arrived in the operations area.

Working together through a highly automated network-management system, the pieces of the network created a reliable, flexible and survivable communications structure. As a completely integrated portion of the Global Information Grid, the network gave warfighters access to information from a broad range of organizations and other sources.

Red communications architecture

Red communications and information capabilities in both force-on-force scenarios reflected a projection of technologies available

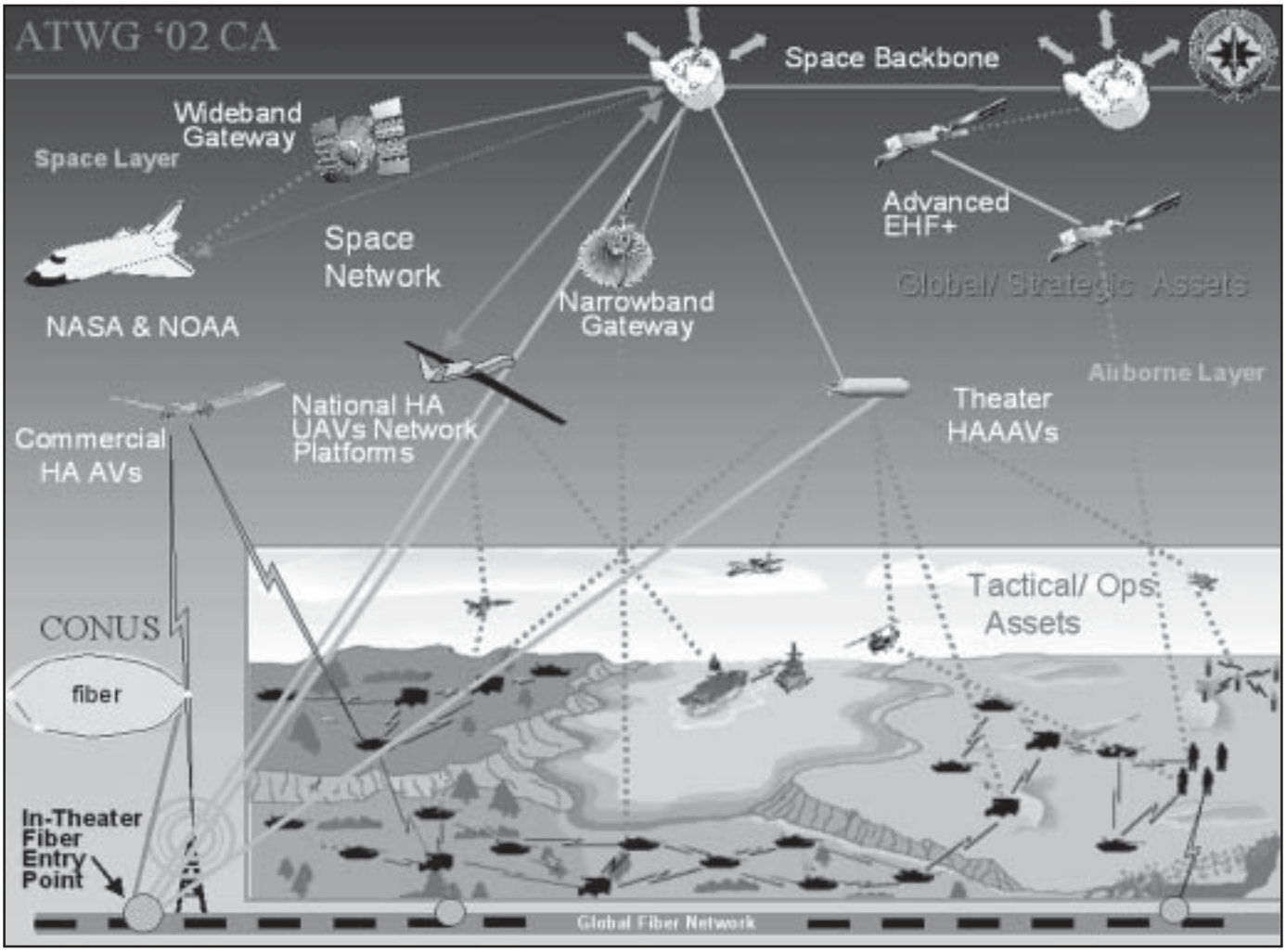

Figure 23. The communications architecture for ATWG '02 -- specifically the 2025 multitiered architecture supporting Blue forces. *(Illustration courtesy of Communications-Electronics Command's Research, Development and Engineering Center)*

on international markets in 2015. By adapting commercial capabilities, Red forces fielded systems roughly one generation behind those employed by Blue forces. Though Red forces didn't enjoy the robust airborne and space capabilities available to Blue, their warfighting networks were flexible, secure and difficult to degrade. The commercial telecommunications infrastructures to which Red forces had access – fiber and commercial switches installed in hardened sites – presented an equal challenge. Red command-and-control could survive.

Insights

After several days of move and countermove, assessment and adjudication, and consideration of interwoven events around the globe, several insights emerged. These insights were based on feedback from experienced warfighting leaders and reflect the outcomes of wargame operations executed by Blue and Red forces. Blue was able to get to the fight quickly and, once engaged, could consistently see first, understand first, act first and finish decisively. None of that would have been possible without information superiority delivered by the WIN-T/JTRS network.

INSIGHT 1: THE 2020 WIN-T/JTRS ARCHITECTURE CAN MEET THE DEMANDS OF FULL-SPECTRUM OPERATIONS. Faced with global missions that included near-major theater war, small-scale contingencies, peace enforcement, humanitarian assistance, counterinsurgency, counterdrug and homeland security, the 2020 Army placed a heavy demand on its information systems. The WIN-T/JTRS architecture provided the flexibility to meet each requirement as it emerged.

The architecture's modular features allowed warfighters to tailor forces for each mission without concern for the communications and information-systems structure that would support them. At each echelon, the combination of embedded ground-based systems and the airborne- and space-based network "backbone" provided needed connectivity and throughput.

Equally important was the architecture's ability to move information among legacy, interim and objective forces, and sister services. Allies and coalition partners were also readily accommodated, with the levels of connectivity

and shared information more a matter of policy than an issue of technology.

The ability of the architecture to instantly become a fully integrated part of the GIG gave warfighters located anywhere in the world the ability to tap a broad range of government and commercial organizations and information sources.

Insight 2: The 2020 WIN-T/JTRS architecture enables rapid force deployment and immediate entry into the fight. The WIN-T/JTRS architecture placed the communications/information network components on-board warfighter platforms or in the airborne- and space-based "backbone." The warfighter, in essence, carried the network to the fight and, as a result, could accommodate more combat systems in the early-deployment airflow.

The architecture also ensured arriving forces would be able to enter the fight "off the ramp." With the constant availability of space segment; prepositioned, high-altitude airborne platforms; and the embedding of components on warfighter platforms, the network formed automatically as the force arrived. The warfighter didn't have to delay combat operations while waiting for establishment of the information network. As the force grew and began to maneuver, network managers configured the network, monitored network performance and allocated network resources to meet changing requirements.

Insight 3: The 2020 WIN-T/JTRS architecture allows warfighters to take advantage of opportunities and execute rapid, decisive operations. The same capabilities that allowed arriving forces to fight "off the ramp" enabled the rapid execution of multiple, dispersed operations over extended areas.

The combination of ground-, airborne- and space-based components and a highly automated network-management system ensured the network would automatically cover the warfighting elements. There was no requirement to manually reconfigure the network or to position – and protect and support – ground relays. This feature allowed warfighters to act quickly as opportunities emerged or as the situation changed.

Insight 4: The WIN-T/JTRS multitiered architecture enhances survivability of the warfighter's information network and ensures the flow of critical information. Red attempts to degrade the WIN-T/JTRS network had little effect on Blue information flow. At various points in the game, Red attempted to jam network components, and at one point succeeded in destroying one of Blue's high-altitude airborne platforms. With the density of alternate paths offered by the multitier network, and the ability of the network to automatically reroute traffic and allocate bandwidth based on command-directed parameters, the incident was virtually unnoticed by warfighting commanders and their staffs.

As expected, the combination of capabilities built into the multitiered architecture provided reliability through redundancy. That same feature also removed single points of failure. A more subtle but equally important aspect of the multitiered design was the targeting problem it presented to Red. To have any real impact on Blue's information flow, Red would have to repeatedly target multiple components in all tiers of the network. Red found this difficult and costly, and chose to search for other ways to attack Blue's information (for example, Special Operations Forces attacks on the homeland information infrastructure). This outcome reinforced the importance of the investment in the multitier structure.

Insight 5: The 2020 WIN-T/JTRS network is interdependent on joint systems and must be fully interoperable with joint and non-governmental-organization capabilities. A key part of what made the WIN-T/JTRS network function was the availability of assets owned by other services, such as communication-satellite bandwidth and long-range, high-altitude airborne platforms like the Air Force's Global Hawk.

These critical network components allowed WIN-T to be put in place even as combat forces were deploying. The components also provided network coverage over extended distances as maneuver units conducted combat operations throughout the operational area. Allocation of these resources among participating services and agencies required management by the theater commanders-in-chief. In the case of multiple global crises, such as those portrayed in the 2002 ATWG, distribution of these high-demand/low-density items among several theaters will have to be managed at a higher level.

When Red destroyed one of Blue's high-altitude airborne platforms, it became clear that protection of these joint assets – and high-value targets – would require careful coordination. Although the network was designed to identify and take immediate action to eliminate Red systems that threatened Blue's information infrastructure, a defensive measure, such as scheduling a combat-air patrol to cover the high-altitude relays, could have prevented the loss of an important – and limited – resource.

Basic communication/information interoperability with legacy and interim forces that were part of the wargame force structure wasn't an issue since the assumption was made, for game purpose, that all units were equipped with at least WIN-T Block I technology. The key issue, instead, was the high degree of joint interdependence.

Insight 6: The extended network will demand an information-assurance effort that is thorough and constant. As U.S. forces dealt with conflicts around the world, the information network became extended, offering increased opportunities for unauthorized entry or attack.

Red commanders recognized how difficult it would be to degrade the tactical portion of Blue's infor-

mation network and instead actively sought other avenues to disrupt the flow of information. The manipulation of force-deployment schedules, the destruction of military- and civilian-payroll records and the misdirection of critical "just in time" supplies are only a few examples of ways in which determined opponents tried to attack Blue's information infrastructure. Red also found that critical commercial telecommunication hubs inside the United States and overseas could be physically attacked, depriving the network of significant capacity and alternate routing capability.

Thinking opponents will constantly search for ways to disrupt the flow of information on which we're so dependent. We must use all of the available information assurance tools – technologies, policies and procedures – to protect our vital information networks. By carefully and consistently applying these tools, we can ensure the validity and authenticity of information flowing over the network.

INSIGHT 7: THE UNITED STATES WILL FACE ADVERSARIES WHOSE C2 COMMUNICATIONS CAPABILITIES ARE SOPHISTICATED AND SURVIVABLE. In 2020, Blue faced opponents whose command and control systems were effective and difficult to take down.

Our adversaries studied emerging technologies and their application to warfighting, and recognized the value of information as a force multiplier. They reasoned that if information could allow the United States to transform into a smaller, lighter force, then a country with a force that was already small and light could reach a form of warfighting parity by using information.

These countries also understood America's tendency to attack an opponent's C2 system early in a campaign. To counter that possibility, they expended considerable money and effort to protect their command, control and communications infrastructure, transitioning from exposed microwave systems to buried fiberoptic cable and building hardened underground switching centers. Blue targeting cells had difficulty finding these facilities; most remained operational during the conflict.

Equally important, Red found it could equip its tactical forces with mobile systems that were readily available in the commercial marketplace. Even systems that were a generation behind U.S. technology possessed enough capability to allow Red commanders to compete with U.S. forces.

We must consider that future adversaries may possess a C3 capability that will be far more difficult to defeat or degrade than those we've faced in the past. Even more worrisome is the thought that smaller adversaries will be able to employ leading-edge "niche" technologies available on commercial markets much more readily than the United States can because of their smaller size and the fact that they are not confronted with a lengthy acquisition process.

The road ahead

Throughout the game, the WIN-T/JTRS network performed as expected. Forces deployed rapidly, changed and rehearsed missions enroute, entered the fight quickly and enjoyed unprecedented freedom of maneuver. The network enabled a high degree of situation understanding at all echelons and enhanced the warfighter's decision-making process. The multitier structure and advanced network-management capability absorbed attacks and kept critical information flowing. Integration with the GIG gave deployed forces access to theater and sustaining-base resources and made joint interdependence a reality.

Results of the 2002 ATWG are now being analyzed in-depth, and information will be fed into TRADOC's ongoing OF development effort. Ultimately, insights gained through the wargaming process will help the Army's senior leaders reach key decisions about OF systems and force structures.

Wargame results will also help us refine communications-system requirements and provide an operational setting against which emerging solutions can be measured. The wargaming process – ATWG 2003 – will continue to give us a vehicle with which we can "test drive" concepts in a future environment, thus ensuring the systems and doctrine we develop always meet the warfighter's needs.

Retired COL Wells is a veteran of three ATWGs. A former TRADOC systems manager for the mobile-subscriber-equipment system, Wells works for L-3 Communications/EER Systems, Inc., supporting the Concepts Branch of the Signal Center's Directorate of Combat Developments.

Mr. Paul is a telecommunications specialist in the Signal Center's DCD Concepts Branch. ATWG 2002 was his first venture into the world of transformation wargames.

ACRONYM QUICKSCAN

ATWG – Army Transformation Wargame
C2 – command and control
C3 – command, control and communications
DCD – Directorate of Combat Developments
GIG – Global Information Grid
JTRS – Joint Tactical Radio System
OF – Objective Force
RDEC – Research, Development and Engineering Center
TRADOC – Training and Doctrine Command
WIN-T – Warfighter Information Network-Tactical

Bridging the 'digital delta': training III Corps Signaleers

by COL Dennis Via
and MAJ Linda Jantzen

Army transformation and digitization is in full swing at Fort Hood, Texas. With this comes the most significant training challenge for III Corps and its Signal units since the mobile-subscriber equipment system was initially fielded a decade ago.

The 3d Signal Brigade, 13th Signal Battalion, 124th Signal Battalion, 534th Signal Company and Reserve Component affiliates 212th Signal Battalion, 249th Signal Battalion and 136th Signal Battalion have in recent years installed and/or fielded multiple enhancements and replacements to existing MSE equipment. These enhancements and replacements were made to support the explosion of interoperable Army Battle-Command Systems and multimedia videoteleconferencing systems. Locally procured, commercial-off-the-shelf systems and institutional upgrades such as Area Common-User System-Modernized provide an interim capability to accommodate the increased bandwidth and interoperability demands placed on our tactical network until the objective Warfighter Information Network-Tactical takes the stage.

The ACUS-Mod program provides near-term increases in data capacity, extended range and improved data quality to III Corps' MSE architecture by adding asynchronous-transfer-mode switching, high-capacity line-of-sight transmission, battlefield VTC and information-assurance tools to division- and corps-area Signal battalions. In contrast with earlier MSE enhancements, ATM MSE will be fielded only to III Corps Signal units and will require significant individual and collective task training above and beyond that introduced at Advanced Individual Training or Signal leader courses. Signal soldiers from AIT arrive at an ATM-equipped unit with about 40 percent of the required skill set; soldiers and leaders arriving from other units have even less.

Transforming America's counter-offensive corps

Although 124th Signal Battalion has used ATM/HCLOS/BVTC/IA equipment since the "first digital division" completed all its systems fieldings in December 2000 and its division capstone exercises I and II in 2001, the "first digital corps" Signal brigade is still in its infancy. The requirement to install, operate and maintain a hybrid of MSE systems – including ATM, tactical high-speed data network and legacy systems – while maintaining deployment readiness introduces significant challenges.

"Signal is a combat arm, and information is an element of combat power," said LTG B.B. Bell, III Corps' commander, at a recent III Corps G-6/S-6 conference at Fort Hood. Starting with the success of 4th Infantry Division's capstone exercises (DCX Phase I and II) in 2001, III Corps Signal units must now continuously maintain a high state of readiness with their unique switching and transmission systems to support operational missions and requirements.

III Corps is currently being modernized as the FDC – the first fighting force of its size with a complete suite of interoperable, automated command, control, communications, computers and intelligence systems. Accordingly, III Corps units have made great progress in leveraging these information systems' capabilities in their tactical-operations centers. To be effective combat multipliers, all battlefield information systems must have the ability to quickly and reliably exchange data across the network. If information is a weapon, ABCS provides the ammunition, and the communications network is the delivery system.

The III Corps information-delivery system is currently a hybrid of different switching and transmission technologies, all routinely operating in the same network. The 124th Signal Battalion and 16th Signal Battalion currently employ ATM and HCLOS. All node centers and small extension nodes in 13th Signal Battalion and 57th Signal Battalion – as well as the large extension nodes in 124th Signal Battalion, 16th Signal Battalion, 136th Signal Battalion and 212th Signal Battalion – received the THSDN modification work order in 2001, upgrading routers and adding enhanced-transmission-group modular orderwire and high-speed forward-error correction cards.

THSDN increased data-transport capability by an order of magnitude and accomplished it without a corresponding increase in training requirements. Our military-occupation-specialty 31F switch operators required only 40 hours of training to become proficient. Since THSDN is currently being fielded across the Army, the need for sustainment training is somewhat diminished since new arrivals to III Corps are likely to have worked with this equipment in previous Signal units.

Fort Hood's ACUS-Mod systems

Though ATM is more complex and difficult to train, the requirement for ATM capability has been repeatedly demonstrated in III Corps. A year ago in III Corps'

warfighter exercise Phantom Fighter 2001, the tactical C4I, surveillance and reconnaissance network supported 197 ABCS users, 514 tactical local-area network clients and 18 servers, and 11 serial-based VTC suites. One year later, the corps' Embedded Warfighter 2002 network was even more complex and extensive, supporting 257 ABCS users, 1,289 TACLAN corps and division clients, and 20 serial-based VTC suites.

To meet the demand in the near-term, ACUS-Mod modifies MSE NCs and SENs with commercial standard ATM switches and Internet-protocol routers. IP-based BVTC equipment is added to ATM NCs. The coaxial connection between NCs and the LOS radio system is upgraded with fiberoptic links. Also, security-protection systems are added that include access-control lists, firewalls, intrusion-detection systems, malicious-code detection, automatic-password generation, encryption capability and IA-management capability.

The AN/GRC-226 LOS radio system is replaced by the AN/GRC-245 trunk radio, or HCLOS, providing a data rate of 8.192 megabits per second. HCLOS is interoperable with legacy switching and LOS systems; provides a transmission range of up to 40 kilometers; and operates as a terminal or radio-relay system.

Fielding ACUS-Mod systems to 16th Signal Battalion required the unit to exchange practically every piece of legacy MSE Signal equipment. The battalion received 52 ATM switching shelters, 73 HCLOS radio shelters and six new 30-meter antenna masts, as well as upgraded 122 of the 15-meter antenna masts and fielded the integrated-system control – all within six months.

III Corps training challenges

"Digital training" is most commonly thought of as training for ABCS operators and digitally equipped TOC soldiers at all levels. In reality, however, digital training is not only a training issue, it's a ***readiness*** issue. In III Corps, training MSE operators and Signal units to enable ABCS to operate across a tactical network closely parallels training ABCS operators and digitally equipped TOC personnel. Along with training MSE operators and network controllers, Signal units – like their subscribers – have a requirement to train their own staffs to use ABCS systems. Therefore, digital training in Signal units must incorporate operating and managing both ABCS and unique Signal-support systems.

III Corps' Signal leadership recognized the need for a new training strategy as the corps transitions from analog to digital operations. ... The vehicle for accomplishing this is an evolving III Corps digital-training vision and strategy entitled Phantom Warrior Digital University. This strategy is a cooperative effort among 3d Signal Brigade, division Signal battalions, Fort Hood agencies, Communications-Electronics Command, General Dynamics, Fort Hood's Digital Training Facility and the U.S. Army Signal Center to develop and execute a digital-training program that creates, maintains and improves expertise with modernized Signal-support systems.

Unlike the THSDN upgrade and earlier modifications, the uniqueness and volume of ACUS-Mod systems in III Corps creates an enormous training shortfall in Signal units – similar to the "digital delta" associated with training ABCS operators across the corps. Bridging the digital delta far exceeds any single unit's resources of time, equipment and funding due to the real-world requirement for the Signal-unit commander to maintain deployment readiness and to support ongoing training exercises such as U.S. Forces Korea's Ulchi Focus Lens and frequent National Training Center rotations.

The first corps-area Signal battalion to modernize with ATM/HCLOS/BVTC/IA was 16th Signal Battalion in January-May 2001. The 1st Cavalry Division's 13th Signal Battalion began fielding in March; 13th will be followed by 57th Signal Battalion in January 2003 and Reserve Component affiliates in Summer 2003. Maintaining the proficiency of operators, leaders and network managers as units modernize requires intense training and personnel management.

The 16th Signal Battalion sent 582 soldiers through new-equipment training, which included the 160-hour ATM operator/maintainer course; the 24-hour HCLOS operator/maintainer course; the 104-hour ISYSCON staff user and 40-hour system-administrator courses; the 160-hour IA-management-cell course; the 24-hour transportable-assembly/perimeter-protection courses; and the fiberoptic-cable repairer course. NET culminated in crew drills and a battalion field-training exercise that integrated all the new systems into a battalion-sized network.

Following initial NET provided at Fort Hood by the program manager, each battalion must develop and maintain its own initial and sustainment training program as new soldiers arrive. With two ATM battalions currently on Fort Hood, more than 120 soldiers and leaders require individual initial or refresher training, and more than 500 require sustainment training each year. Also, more than 390 Signal assemblage and battle-staff teams require sustainment training per year. Compounding this issue is an average annual turnover rate of some 1,728 Signal soldiers annually.

The training population continues to grow as III Corps Signal units field ATM/HCLOS, placing an added strain on already limited resources. By 2004, the number of assigned soldiers and leaders requiring ATM and HCLOS training alone is anticipated to exceed 1,600 annually.

Digital-training strategy

Concurrent with fielding the ACUS-Mod systems, III Corps' Signal leadership recognized the need for a new training strategy as the corps transitions from analog to digital operations. To maintain a Signal unit's effectiveness, all levels

of training must be considered: individual, collective/team and collective/staff, and leader training. Depending on when the training takes place and the target audience's level of training at the time, the training may be considered "initial" (for new arrivals, unfamiliar with the equipment), "sustainment" (scheduled training to maintain skills over time) or "delta" (to supplement training after changes are made to the software of a system that has previously been trained).

The vehicle for accomplishing this is an evolving III Corps digital-training vision and strategy entitled Phantom Warrior Digital University. This strategy is a cooperative effort among 3d Signal Brigade, division Signal battalions, Fort Hood agencies, Communications-Electronics Command, General Dynamics, Fort Hood's Digital Training Facility and the U.S. Army Signal Center to develop and execute a digital-training program that creates, maintains and improves expertise with modernized Signal-support systems. The program, which parallels the corps' training program for ABCS and related systems, is designed to be comprehensive and flexible enough to support each level and type of training simultaneously and continuously while making the best use of the limited resources available.

Phantom Warrior Digital University encompasses the collective efforts of Signal units and other agencies at Fort Hood that contribute to ongoing initial and sustainment training for III Corps-unique as well as legacy Signal-support systems. Each Fort Hood Signal battalion is responsible for developing a training program and conducting training for its assigned topic area. Hence, each battalion participates in technically training its own and every other battalion's soldiers.

Subjects or topics to be trained are known as "colleges," and the responsible battalion commander is known as the "dean" of that college. The colleges are ATM/switching systems, conducted by 16th Signal Battalion; transmission systems, conducted by 13th Signal Battalion; THSDN, conducted by 57th Signal Battalion; and advanced Signal concepts, conducted by 124th Signal Battalion. Specialized subjects, taught less frequently for low-density skills, include special circuits, ISYSCON, strategic-to-tactical interface, Tactical Internet, tropospheric-scatter transmission and serial-based BVTC.

Phantom Warrior Digital University also seeks to meet the training needs of the G-6/S-6, who currently receives no formal training despite the significantly increased complexity of modern digital systems. Fort Hood's Central Technical Support Facility offers a brigade/battalion S-6 tactical-network leader course. This course provides a brief overview of the first digital division, including its major network components, key network concepts and network protocols used in the flow of electronic-communications traffic at echelons brigade and below. Students learn techniques to view equipment status and to troubleshoot the LAN and its interface to the wide-area network provided by the supporting Signal unit.

Subjects introduced in the pilot S-6 tactical-network leader course held in July 2001 included FDD overview; basic networking; introduction to transmission-control protocol/IP, IP addressing and subnet masks; introduction to Cisco Catalyst switches; introduction to Cisco Catalyst 5505 multi-layer switches, Cisco 3600 routers and routers installation; basic traffic management and access list; open short-path-first features and operation; FDD architecture overview; connectivity wingman to brigade; and overview of the TOC server/echelons-below-corps concept.

Two more courses have been conducted, with each being further refined to meet the G-6/S-6's training needs.

ATM and HCLOS training

The Mobile Sustainment Training and Assessment Team conducts initial training for new-arrival MOS 31F ATM and MOS 31R HCLOS operators at General Dynamics' Regional Support Center on Fort Hood. MSTAT, a Signal Center initiative, is currently composed of three General Dynamics instructors who teach an ATM operator course, HCLOS operator course and router-fundamentals course several times each quarter. The RSC provides a classroom equipped with routers and workstations for router-fundamentals training. Equipment used for ATM training is provided by one of the two ATM battalions on Fort Hood.

Following MSTAT instruction, advanced training and sustainment training is conducted in the unit. Once the Phantom Warrior Digital University concept is completely implemented, 16th Signal Battalion will be responsible for planning and conducting a training program for ATM switch operators. The program will incorporate unit instructors, CECOM and General Dynamics instructors plus civilian education, and it will be conducted as frequently as necessary to accommodate all ATM units on Fort Hood.

IA training

One of the newest and fastest-growing digital-training requirements is IA. Contractors now train IA in III Corps as COTS courses. The 124th Signal Battalion and 16th Signal Battalion received NET after they received their transportable-area/perimeter-protection and IA-management cells. No formal sustainment-training program has been established; however, Fort Hood's DTF will host IA training beginning in July.

BVTC training

III Corps devotes significant assets to procure, install, operate and maintain a serial-based, deployable BVTC network. BVTC usage has increased dramatically over the past 20 months. At the corps command-post level, BVTC is used as the new "corps command net" and as such carries the expectation of subscribers for 24-hour continuous operations.

To meet this requirement, 3d Signal Brigade established a special

platoon in Fall 2000, the Corps Communications Support Platoon, which includes a section of 15 soldiers dedicated to providing quality BVTC to the corps headquarters in garrison and to corps CPs in the field. In addition to installing, operating and maintaining BVTC systems, CCSP provides all communications support to the corps' tactical CP, including switching, data, single-channel and multichannel communications, and secure, mobile, antijam, reliable tactical terminal.

CCSP soldiers come from within the brigade, and most are Career Management Field 31. All are locally trained to operate BVTC equipment.

Most training is conducted by the CCSP network technician and contracted personnel. Surge training is conducted prior to every corps exercise and deployment to ensure BVTC suites are tested and operators are proficient across the corps.

Tropo training

The 313th Signal Company, a range-extension company organic to 3d Signal Brigade, has 16 TSC-170 tropospheric-scatter transmission systems. Although both Army and Air Force units use tropo, the MOS 31Rs who operate the TSC-170 receive no formal training at AIT. The 313th conducts regular "Tropo University" courses throughout the training year to maintain proficiency. The company has combined efforts with 11th Signal Brigade to improve this portion of its training program.

Network-management and control training

All III Corps signal units use ISYSCON for network planning, management and control. Following NET for brigade- and battalion-level S-3 soldiers, sustainment training is the unit's responsibility. Units have had difficulty in maintaining proficiency on ISYSCON due to its lack of use in garrison between field exercises – similar to the situation with ABCS systems.

The 3d Signal Brigade maintains an ISYSCON in the S-3 operations office, cabled into Fort Hood's garrison-training-network NC. GTN consists of an NC, SEN and radio-access unit, installed and operated on a rotating basis among the Signal battalions on post. GTN operates five days a week, 24 hours a day, and provides a vehicle for ISYSCON training as well as a continuous resource for mobile-subscriber radio-terminal user training, strategic-to-tactical gateway and installation LAN gateway for the major subordinate commands at Fort Hood.

The brigade has experienced limited success in conducting sustainment training for its ISYSCON operators and those of the Signal battalions on post. NET is intensive and difficult to replicate if a network controller arrives after ISYSCON is initially fielded. The PM provided a post-fielding round of NET at Fort Hood in Fall 2001. However, no permanent formal program of sustainment training for ISYSON is in place. Proficiency will increase, of course, as ISYSCON is fielded across the Army and operators take their expertise from duty station to duty station.

ABCS training

Fort Hood's Central Technical Support Facility conducts regular ABCS training as part of a larger program for training G-6/S-6 personnel on ABCS, TOC LANs, Enhanced Position-Location Reporting System and other emerging C4ISR systems. The program has been successful; however, the high turnover of soldiers greatly reduces the number of proficient operators available to the unit.

Training on Force XXI Battle-Command Brigade and Below, All-Source Analysis System and Advanced Field-Artillery Tactical Data System is migrating to Fort Hood's DTF – this training was scheduled to begin in late June or early July. DTF will bring other courses on-line as resources become available.

Training management

Equipment fielding doesn't end with signing hand-receipts or concluding NET. With the continuous flow of new systems and software – as well as upgrades to existing systems – into III Corps units, setting and maintaining a coherent course for training time and other training resources requires a continuous dialog among several agencies both on and off Fort Hood. The need for a regular forum in which to bring together these agencies led to establishing the first digitized corps' Signal Council of Colonels, held quarterly at Fort Hood, and hosted by 3d Signal Brigade's commander and III Corps' deputy G-6.

The FDC Signal CoC brings together III Corps agencies and Signal units, materiel developers, combat developers, training developers, Training and Doctrine Command system managers, PMs, contractors and representatives from Forces Command and the Signal Center. This group discusses future and ongoing equipment hardware and software fieldings related to providing Signal support to the FDC. This team approach to fielding and training provides a model worth emulating as systems currently unique to III Corps are fielded throughout the Army.

Digital-training summary

In summary, digital training in III Corps is characterized by:

• **Centralizing control, decentralizing execution.** Team Signal, a special staff section within III Corps' G-6, provides direct support on the ground at Fort Hood, working alongside combat and material developers, force-integration officers and commercial vendors to ensure equipment and training is properly integrated for maximum combat effectiveness. Team Signal compiles training requirements and manages the master plan that specifies which agency will take on each area of instruction.

Several units and agencies share the responsibility of conducting digital training:

1. Signal units conduct new-arrival and refresher courses in an assigned area of expertise, grouped

together into "colleges," to Signal personnel.

2. General Dynamics and the Signal Center provide an MSTAT to teach router fundamentals, ATM and HCLOS operator courses at Fort Hood's RSC.

3. CECOM's logistics-assistance officer provides full-time digital-training developers and network instructors.

4. The PM conducts additional NET/delta training and seats to new arrivals.

5. The Directorate of Information Management conducts recurring digital-education courses and IA certification.

6. III Corps G-3's Digital Training Division has the lead on obtaining programming for DTF, the key to readiness of battle staffs – including Signal battle staffs.

• **USING STATE-OF-THE-ART FACILITIES.** Fort Hood has several training facilities designed for digital training. Some are dedicated to training Signaleers, while others are available for general usage:

1. Soldier Development Center. Scheduled to open in June, the SDC provides three classroom wings, 60 classrooms, education services and 23 distance-learning classrooms. Signal units will use the SDC to enhance individual training through degree programs, computer-based training and distance-learning programs for Signal MOSs.

2. GTN. In operation since September 2000, GTN is used to provide continuous RAU coverage in the garrison area, access to the strategic-to-tactical interface gateway, tactical-to-Defense Switched Network interface, and combat-net-radio-interface coverage in the garrison area. Signal units are tasked on a rotating basis to provide an NC, RAU and SEN for this service. Training benefits extend from the Signal platoon providing the service to units who desire to train or perform maintenance on MSRTs, and to Signal units who want to install internodal or extension links to the NC for training or mission support.

3. DTF. Scheduled to open for individual training in June and for collective training in Fiscal Year 2003. Provides multi-echelon training in a realistic TOC environment. Also provides linkage among live, virtual and constructive training facilities. Signal units will conduct collective/staff training in this facility, including battle-staff operations using ASAS, Maneuver Control System and Combat-Service-Support Control System. Training will also include network management and control using ISYSCON.

4. General Dynamics' RSC. Provides a computer and router lab for MSTAT courses, including routing fundamentals. Also provides docks, power connections and General Dynamics technicians to support ATM operator course, ATM network troubleshooting, ATM node-management course and HCLOS operator course.

5. CTSF. Currently provides advanced tactical-network training to brigade and battalion S-6 soldiers at all levels. ATNT is a six-week course covering LANs, EPLRS and other topics critical to the success of the brigade and battalion S-6. Beginning in late June, the course will be relocated to the DTF.

• **INVESTING IN NONCOMMISSIONED OFFICERS.** Even with an abundance of skilled contractors who partner with III Corps to conduct training and provide technical assistance, the importance of leader training cannot be overstated. Although the contractors at Fort Hood, including the General Dynamics MSTAT, do an exceptional job of classroom and hands-on training and assistance for ATM and HCLOS equipment, there's no substitute for the training, mentoring and confidence-building benefits of having NCOs train our soldiers. The challenge is how to train officers, NCOs and warrant officers on systems they may have never seen before arriving in III Corps to take a leadership position.

The 16th Signal Battalion's approach is to conduct "ATM Academy" quarterly. This two-day event is designed to give leaders and advanced operators classroom and hands-on instruction in ATM network theory, management and troubleshooting. The agenda includes such core competencies as router operation and troubleshooting, routing protocols, IP and subnetting. The principle instructors, coordinated by the battalion S-3, are the unit network technicians and General Dynamics technical representatives.

Leader training also includes self-development. Through the e-Army University program, Fort Hood's education center provides laptop, color printer and dial-up access to the Internet for soldiers who desire to pursue civilian college education. The student must have three years' retainability and complete 12 semester-hours in the first two years.

When open, the new SDC will assist commanders by providing a state-of-the-art facility and some coursework to allow soldiers to pursue work-related civilian and military courses on duty time. The benefits of civilian education for the soldier and the Army are significant, given the increasing use of COTS equipment in tactical communications systems.

Conclusion

As a result of being "first in the chute" to field many unique Army C4 systems, Signal units in III Corps recognize they are walking point on this issue and must help get it right for our Army. They also recognize that bridging the digital delta is a significant challenge facing our Army, and especially the Signal Regiment, as it transforms to the Objective Force and beyond.

Digital-training requirements in III Corps demand resources far greater than any unit with an operational mission can support. During the post-fielding phase of sustaining unit readiness, partnering is essential across the installation and with external agencies. The overall strategy is to share the burden of high-intensity training to maintain warfighting readiness. III

Corps is effectively leveraging resources from the resident Signal units, General Dynamics, CECOM, FORSCOM, Signal Center, Fort Hood's DTF and III Corps' DOIM to provide soldiers and leaders with the digital training they require to gain and maintain system proficiency to install, operate and maintain digital C4 systems for the warfighter.

COL Via has been 3d Signal Brigade commander and III Corps assistant chief of staff, G-6, at Fort Hood since June 2000. He holds a bachelor's degree from Virginia State University and a master's degree from Boston University. He has served in a variety of command and staff assignments, including battalion S-4 and company commander in 35th Signal Brigade, Fort Bragg, N.C.; War Headquarters communications officer and aide to the Army Forces South chief of staff, Naples, Italy; operations officer, J-6, Armed Forces Inaugural Committee, Washington, D.C.; operations research systems analyst assignments officer, U.S. Army Personnel Command; assistant division Signal officer, battalion S-3, executive officer and commander of 82d Signal Battalion, Fort Bragg; staff officer in the C4 Tactical Systems Division, executive officer and special assistant to the director of plans and programs, office of the director of information systems for command, control, communications and computers; and III Corps deputy assistant chief of staff, G-6. He is a graduate of the Command and General Staff College and the Army War College.

MAJ Jantzen has been the S-3 operations at 3d Signal Brigade since June 2000. She holds a bachelor's degree in mass communications from the University of Illinois in Chicago and a master's degree in telecommunications from Michigan State University. A graduate of the Command and General Staff Officer's Course, she has served in various command and staff positions in the Signal Corps in the United States, Bosnia, Germany, Somalia, Saudi Arabia and Korea. Her assignments include commander, Headquarters and Headquarters Company, 440th Signal Battalion, 22d Signal Brigade, Darmstadt and Lukavac, Bosnia; operations group Signal officer, Combat Maneuver Training Center, Hohenfels, Germany; battalion S-1, battalion maintenance officer and division Signal plans officer, 10th Signal Battalion, 10th Mountain Division, Fort Drum, N.Y., and Mogadishu, Somalia; and platoon leader, 26th Signal Battalion, 93d Signal Brigade, in Operation Desert Storm.

ACRONYM QUICKSCAN

ABCS – Army Battle-Command System
ACUS-Mod – Area Common-User System-Modernized
AIT – Advanced Individual Training
ASAS – All-Source Analysis System
ATM – asynchronous-transfer mode
ATNT – advanced tactical-network training
BVTC – battlefield videoteleconferencing
C4I – command, control, communications, computers and intelligence
C4ISR – command, control, communications, computers, intelligence, surveillance and reconnaissance
CCSP – Corps Communications Support Platoon
CECOM – Communications-Electronics Command
CoC – council of colonels
COTS – commercial-off-the-shelf
CP – command post
CTSF – Central Technical Support Facility
DCX – division capstone exercise
DOIM – Directorate of Information Management
DTF – Digital Training Facility
EPLRS – Enhanced Position-Location Reporting System
FDC – first digital corps
FDD – first digital division
FORSCOM – Forces Command
GTN – garrison training network
HCLOS – high-capacity line-of-sight
IA – information assurance
IP – Internet protocol
ISYSCON – integrated-systems control
LAN – local-area network
LOS – line of sight
MOS – military-occupation specialty
MSE – mobile-subscriber equipment
MSRT – mobile-subscriber radio terminal
MSTAT – Mobile Sustainment Training and Assessment Team
NC – node center
NCO – noncommissioned officer
NET – new-equipment training
PM – product manager
RAU – radio-access unit
RSC – Regional Support Center
SDC – Soldier Development Center
SEN – small extension node
TACLAN – tactical local-area network
THSDN – tactical high-speed data network
TOC – tactical-operations center
VTC – videoteleconference(ing)

Streaming video and video on demand:

part of the new warfighting requirements

by LTC Jeff Girard

It's a fact of life. Video streams in all their forms and sources are becoming a fixture in modern tactical-operations centers. Video streams are being used to pass intelligence, collaborate over plans, monitor public opinion, keep abreast of world news and even to entertain.

Most Signal officers who have been "raised" on mobile-subscriber-equipment networks shudder at thoughts of streaming video as they think of its impact on the relatively small datalinks in the area common-user network. I contend, however, that as automation officers, our job is to provide these resources to our customers. It's our responsibility to devise ingenious and unorthodox solutions to achieve our commanders' requirements.

This article outlines how the Division Automation Office of 10th Mountain Division (Light Infantry) achieved those goals as part of the Coalition Forces Land Component Commander-Forward headquarters in a forward-deployed theater of operations supporting Operation

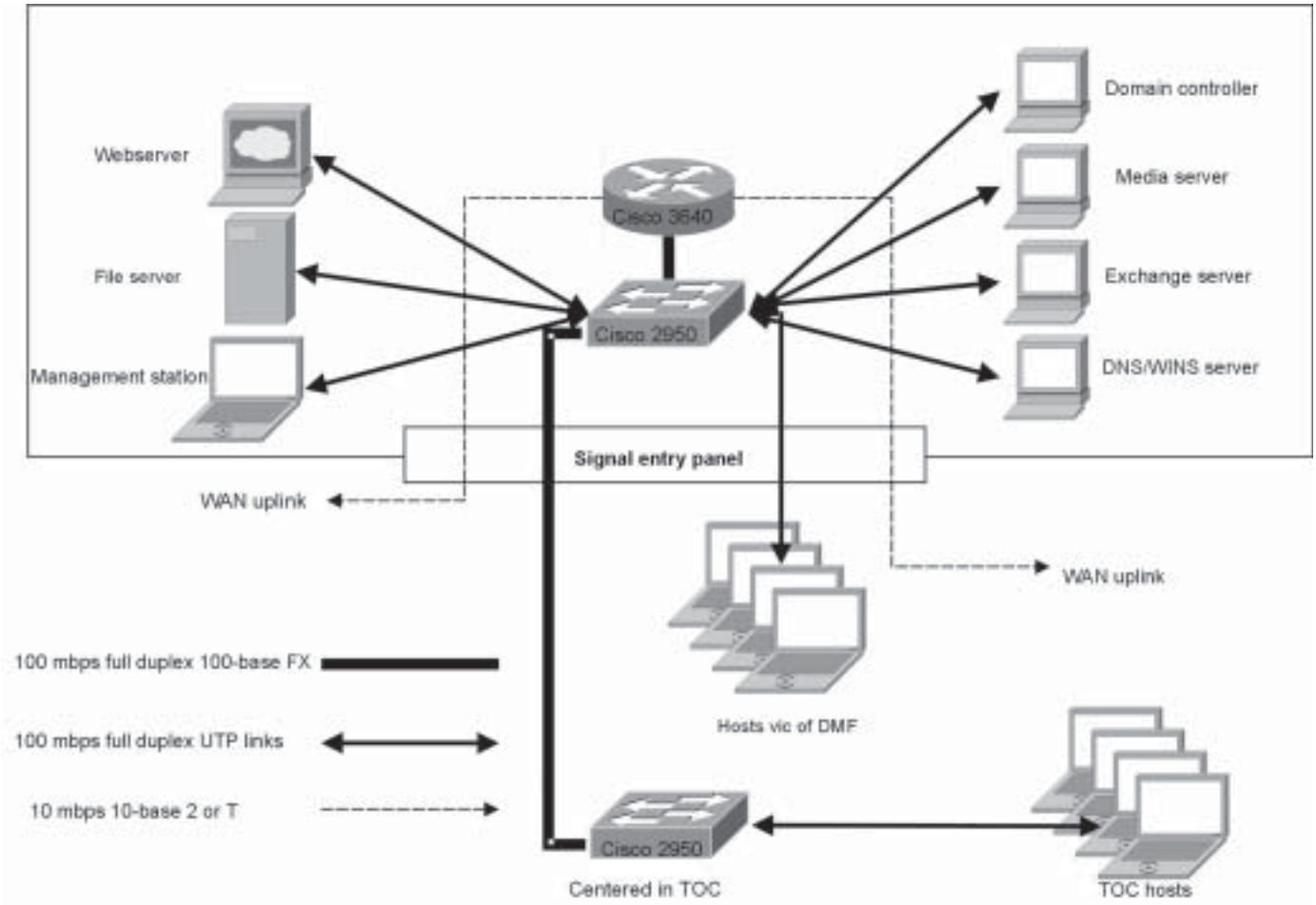

Figure 24. 10th Mountain Division's TOC infrastructure. The boxed area at the illustration's top shows the setup inside the data-management facility truck, mounted on 19-inch racks.

Enduring Freedom. We devised, engineered, implemented and maintained a media server that delivered high-quality video and audio streams directly to the individual soldier's laptop computer in his work area without any negative impact on the network, infrastructure or TOC bandwidth.

The key to our ability to provide our customers these video services is that we've migrated our TOC infrastructure from a hub-based to a switch-based architecture. As Figure 24 indicates, the TOC infrastructure provides for dedicated 10/100 megabits per second auto-sensing ports to every laptop and workstation in the TOC.

The theory behind the media server's implementation is straightforward. A video or an audio stream is identified as being important to the commander and/or staff. These signals are then fed into the media server and are "captured." A combination of specific hardware and software is then used to digitize these media streams and process them into a format that can be broadcast from the media server as digital packets of information. These packets are then immediately rebroadcast out of the server (in the case of a live-stream broadcast), or they are stored on a file server to be recalled and viewed at a later time (as video/audio on demand). In either case, these media streams are delivered via the TOC infrastructure to the individual's laptop and are delivered to the user as streaming video using specialized software on the client machine.

The details of this process and the hardware/software required will be covered later in the article. Figure 25 shows a simple block diagram of the theory.

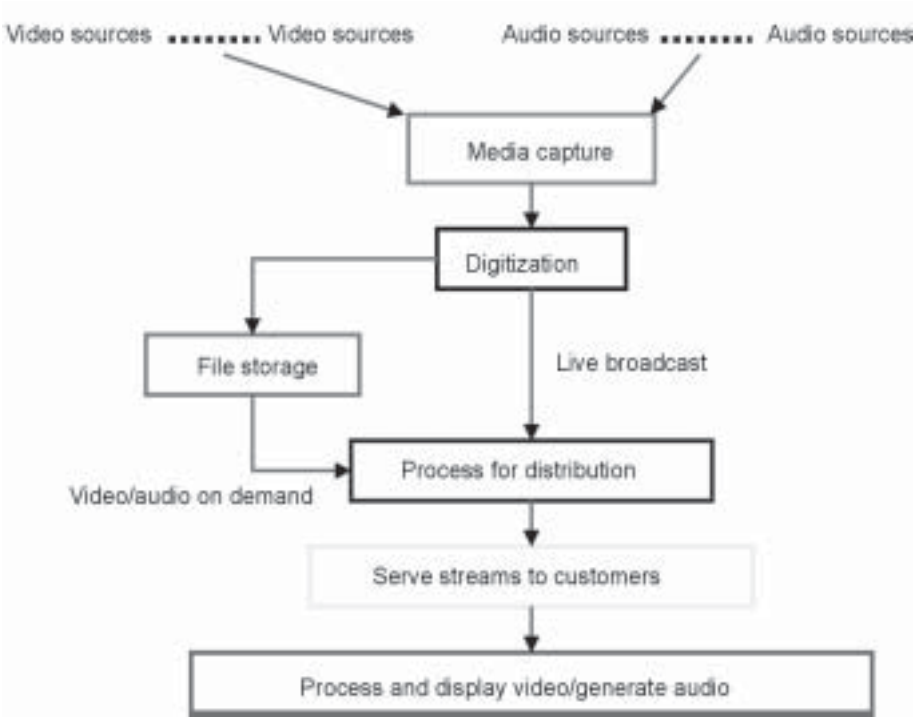

Figure 25. Block diagram of theory behind implementation of the media server.

Media server's 'nuts and bolts'

This section will focus on the physical, electrical and procedural implementation of the media server in the TOC. The next section will outline our future plans for other connections and enhancements.

The only "feed" for the media server was the Armed Forces Radio and Television Service. An earth station near our TOC received the AFRTS signal. Installed inside the TOC was an AFRTS receiver – the point-of-presence for the media feed.

The physical connections began with this AFRTS receiver. From the AFRTS receiver's output, the RG-59 coaxial cable went into a six-way splitter, each port of which led to a television set somewhere in and around the TOC area (battle-management element, commanding general's office, public-affairs cell, distinguished-visitor quarters, commanding general's sleep hooch, and the last port fed my media server). The RG-59 cable from the splitter was fed into the data-management facility that houses the media server. The RG-59 cable was connected to the input of a commercially available videocassette recorder/player.

Previously we had installed an Osprey-100 video-capture card into one of the server's peripheral-component interface slots using software included on the installation compact disk. We used one-half of a standard Radio Corporation of America patch cable to connect the VCR's video outport to the VCC's Composite Video 1 jack.

We had also previously installed a SoundBlaster sound card into another of the server's PCI slots using software included on the installation compact disk. We then used the other half of the standard RCA patch cable to connect the VCR's audio outport to the sound card's line-in jack. We had to install and use an adapter to adapt the physical connector from a female RCA to a 1/8-inch male mini-plug to connect to the sound card.

The server hardware we used was a Pentium III 633 megahertz processor with 256 megabytes of random-access memory and a 13-gigabyte hard drive. The server was running the Windows NT 4 server operating system as a backup domain controller. A detailed wiring diagram is at Figure 26.

The media server's heart is the collection of software programs that capture, digitize, manipulate and serve the streams captured by the video and audio devices. Initially we chose the Real System package, although we later migrated. (That migration is discussed later in this article.) This software is also commercially available. The package

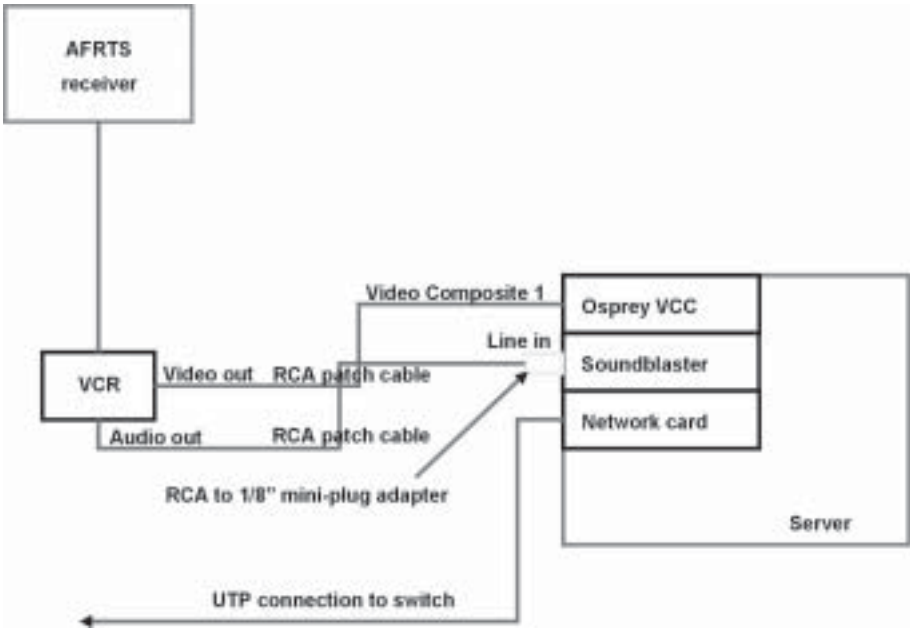

Figure 26. Media server 'wiring diagram.'

includes two products called Real Producer and Real Server. The Real Producer software package received the media streams from the capture devices, digitized them, modified the information into the proprietary Real Media format, and then either stored the file to the hard drive or handed it off to the Real Server package if it was a live broadcast. We provided access to the media server via links from our webserver.

We began our testbed very simply. Our first test run was to rebroadcast the live stream we were receiving from the AFRTS feed over the TOC local-area network to the individual computers. This proved to be fairly simple and straightforward. Our second trial was to capture and record a newsclip from AFRTS, store it to the file server and then rebroadcast the file out as video/audio on demand.

After some trial and error, and understanding the ports being used by the software packages, we were able to rebroadcast the newsclip to multiple computers in the TOC as video on demand. Also, we found we were able to provide multiple iterations of the same recorded stream simultaneously, all being initiated at differing times and all streaming independently of each other.

We concluded our testing by connecting multiple computers to the live stream and multiple computers to the prerecorded stream, and confirming that each was operating satisfactorily and independently of each other.

After testing was completed, we integrated access to the media server via our webservers. We built a new webpage to support the media server and built various links. One link was to connect to the live broadcast stream, and the other links were to connect to recorded files stored on the file server.

After our great initial success, we decided to spread our wings. We took a blank videotape and recorded a portion of the news from the AFRTS feed. We then played that tape of the newsfeed and repeated the same tests as outlined previously. We were able to not only broadcast the VCR tape source as a live stream but also save the file to the hard drive for delivery as video on demand.

There are a great many uses for a system such as the one described. The options are really only limited by your video/audio sources and your imagination. I've outlined some potential uses:

• Live-stream news networks – yes, it is a reality and yes, it is a requirement. Commanders and staffs ***require*** news networks (for example, Cable News Network, Fox News Network, MSNBC, AFRTS). Not only is news used as a source of intelligence, it's also one of the best means of gauging public opinion about military actions both at home and abroad. CNN can be brought into a TOC in variety of ways (small dish-satellite systems such as DirecTV), AFRTS networks and possibly a feed from Global Broadcast Service ground stations.

• Live-stream briefings – does any TOC have a location big enough to host all the people who show up at an operations-order briefing? Normally there's only room for the commanders and primary staff officers. The solution is to set up a small camcorder on a tripod in the area and rebroadcast the live stream so battle captains and staff noncommissioned officers are able to hear the commander give his intent as well as hear the discussions first hand. All from the comparative comfort of their own work areas and laptops.

• Consider all the briefings given repetitively such as newcomer's briefings, commander's welcome briefing, operations-area orientation, safety films and training tapes. Do you need to ensure all your soldiers watch an important training video on how to properly ignite an immersion heater? How are you going to train all your soldiers in a tactical environment where no one has a TV? All these materials can be recorded and preloaded on the file server, where they are accessible to soldiers 24 hours a day from their own workstations.

• Record, store and play on-demand briefings, rock drills, etc. Consider the OPORD briefing discussed above. How many times have you had to go back to the boss and have him repeat something he said in the briefing? Wouldn't it be nice to be able to review the 30-minute intelligence update at your leisure, when you can concentrate on the details you missed the first time? Wouldn't it be nice to be able to give the G-3, G-2 and commander the

ability to review the rock drill several hours after it has taken place and see how the plan will be impacted by new intelligence that has been developed?

The work described previously was a proof-of-concept and trial run based on a Windows NT operating system. We then investigated a Windows 2000-based server. We found that Windows 2000 server software has media production and serving software bundled in. Also, the Windows Media Server saves and produces streams using the Windows Active Streaming Format. The Windows Media Player software is bundled in as a component of all Windows operating systems, and this player reads the ASF format. Upon investigation, we found that WMS offers a very powerful producer tool and many alternatives in capturing and digitizing the media streams.

Through testing and use, we were able to identify some pitfalls with the hardware platform upon which we chose to execute this proof-of-concept. As this was proof-of-concept testing, we used a hardware platform we had readily available. The main shortcoming we found was that the server was underpowered. We used the same hardware platform to produce and serve the streams. We found that the single processor on our testbed machine was almost constantly performing at 100 percent of its central-processing-unit processing power.

These two functions (production and serving streams) don't have to reside on the same platform, and the documentation actually says you will achieve better performance if these functions reside on different platforms. However, as money is a limited resource, we feel that one high-powered server should be able to adequately perform both functions. Following are the details of what we feel is a solid platform to be used as a dedicated media server:

- Minimum dual P4 processor, recommended quad P4;
- 256 mb RAM;
- 100 mb network-interface card;
- Appropriate number of PCI slots, determined by your intentions;
- Hard-drive storage commensurate with your intentions. Through testing, we determined that a 30-minute full-motion video recorded at 30 feet per second requires 60 mb of storage space.

There are several brands of commercially available VCCs. Some cards allow multiple inputs to the single card. You must have enough capture ports to accommodate all the streams you expect to capture simultaneously.

As with the VCCs, there are several brands of commercially available sound cards. Again, if you intend to capture multiple streams simultaneously, you must have an audio-capture device per simultaneous stream.

We found two alternatives for media-server software, although there may be others. The first is the Real Systems product, and the second is the WMS bundled with the Windows 2000 server operating system.

What about the impact of video streams on throughput on the TOC LAN? The short answer is that the impact on the TOC LAN is so low it's negligible. As previously described, we've installed a 100-mbps switched architecture throughout the entire TOC. This effectively creates a dedicated 100-mbps path from every machine back to the server farm in the DMF truck. Streaming video packets intended for one machine have no impact on other machines' ability to access the webserver, email server or wide-area network.

We've set our server to stream the live-video feeds at 500 kilobits per second and to stream the video-on-demand files at 300 kbps. The live stream is delivered via a broadcast stream to all recipients. This means that for the live stream, the number of recipients is immaterial; the stream is fed onto the network at 500 kbps regardless of the number of clients receiving the stream. The video on demand, however, is a unicast stream. Each client registers with the server software and requests to have a stream delivered from a stored file. As I said, this stream is delivered at 300 kbps.

I've analyzed the division's network use via tools at my own workstation. The result was that over the entire period we had the media server operating, use of the link from the server to the DMF switch never exceeded 5 percent.

As I mentioned, the key to our ability to provide this service is that we have the switch-based architecture to support it. Access to the media server was obtained via links off the CFLCCFWD webpage – and therefore was easily accessible to anyone who could reach our homepage.

We were very cognizant of this fact and wanted to ensure the streams wouldn't cross the WAN. This would ensure that users located on a hub-based network wouldn't be allowed to disrupt that network by effectively denying access to other users on that collision domain. Therefore we implemented control measures to ensure that the streams didn't leave the electrical confines of our TOC and that only authenticated domain users were allowed access to the media server.

We used a defense-in-depth scenario to accomplish this mission. First, we applied an access-control list to the router WAN ports. On this access list, we denied all packets that were sourced from the media server's Internet-protocol address. As the media server provided no other functions (for example, domain controller, domain-name service, Windows Internet Naming Service), we were assured that the only packets leaving the media server were streaming video packets. By implementing an ACL on the router's WAN ports, we filtered all these packets and prevented them from leaving the TOC edge-device router.

The second control measure we implemented was to only allow authenticated domain users access to the stored files. The third control mechanism we implemented was to deny access to the files and directories by restricting access to only those specific IP addresses autho-

rized within the CFLCCFWD TOC.

Future connections, enhancements

I think everyone agrees the media server is a huge success and a great asset to the TOC. Our first future action is to build a dedicated media server. As I reported, this was a proof-of-concept test to assess the system's viability. With the success we've achieved, our first post-testing mission is to resource and build a dedicated media-server machine that will be able to handle the anticipated load.

Our second objective is to interface the media server with the Army's GBS Transportable Ground Receive Station. The 10th Mountain Division is scheduled to receive an advanced fielding of two systems in July. We intend to interface the output of the Receive Broadcast Manager as one of the dedicated inputs into my media server. In this way, we'll be able to rebroadcast the feeds TGRS receives to the entire TOC. We'll use the RBM as my point-of-presence for the video and audio feeds.

A third future enhancement to the system is to interface the output of the battlefield videoteleconference system and the media server. In this manner, people would be able to monitor the BVTC but wouldn't be able to participate directly. This would enable everyone within the TOC to be an audience member of the BVTC session as it was occurring. Again, when one considers the physical-space limitations inside a TOC, one can understand how this would be an asset.

Pushing the technological edge

Streaming video and video on demand. These terms were, and in many places still are, profanity in the Signal community. "It will hog all your bandwidth," "your network will self-destruct" and "it's not possible with MSE" were phrases commonly associated with any of our discussions on streaming video. In many cases, these statements are still valid. However, it's my belief, that as automators and champions of the digital world, it's our duty and responsibility to push the technological edge. We should be focusing our efforts to find ways to achieve the end instead of becoming complacent with the status quo.

I've attempted to outline for you how we were able to provide streaming video within our tactical TOC. By investing a relatively small sum of money, we were able to greatly enhance operations within our TOC. I hope this article will help you do the same.

As I close, I want to acknowledge a soldier who was instrumental in developing this media server. I put SPC Michael Jory, a 74B, in charge of this project, provided him the resources and gave him the mission guidance, and he took charge from there. Jory was responsible for "building" the media server and for learning and understanding the software programs' intricacies. He was also responsible for most of the testing described in this article. I attribute the great success we've enjoyed in developing and using this server to his technical abilities and desire to succeed.

LTC Girard has been 10th Mountain Division (Light)'s division automation-management officer since 2000. His previous automation assignments include chief of artificial intelligence and networking at 111th Military Intelligence Brigade, Fort Huachuca, Ariz. His previous Signal assignments include Signal platoon leader, company commander, assistant S-3, S-3 and Signal battalion executive officer. He spent five years as a Signal staff officer for infantry and armor battalions and brigades. He has participated in three rotations to the National Training Center at Fort Irwin, Calif., and two rotations to the Joint Readiness Training Center, Fort Polk, La. He holds a master's degree in artificial intelligence from Duke University.

ACRONYM QUICKSCAN

ACL – access-control list
AFRTS – Armed Forces Radio and Television Service
ASF – Active Streaming Format
BVTC – battlefield videoteleconference(ing)
CFLCCFWD – Coalition Forces Land Component Commander-Forward
CNN – Cable News Network
DMF – data-management facility
GBS – Global Broadcast Service
IP – Internet protocol
Kbps – kilobits per second
LAN – local-area network
Mb — megabytes
Mbps – megabits per second
MSE – mobile-subscriber equipment
OPORD – operations order
PCI – peripheral-component interface
RAM – random-access memory
RBM – Receive Broadcast Manager
RCA – Radio Corporation of America
TGRS – Transportable Ground Receive Station
TOC – tactical-operations center
TV – television
VCC – video-capture card
VCR – videocassette recorder/player
WAN – wide-area network
WMS – Windows Media Server

A combined network:

asynchronous-transfer mode, tactical high-speed data network and legacy mobile-subscriber equipment

by CW2 Curtis Newkirk and MAJ Linda Jantzen

Recently, during III Corps' Battle Command Training Program Embedded Warfighter Exercise, 3d Signal Brigade had the opportunity to combine the Army's newest tactical-communications systems with some of its oldest systems into the largest and most complex tactical command, control, communications, computers and intelligence network III Corps has ever installed. Here we outline for fellow Signaleers how we planned and integrated this network.

The brigade installed, operated and maintained the first network that combined legacy, tactical high-speed data network and asynchronous-transfer mode mobile-subscriber equipment into a seamless, robust network capable of meeting the demands of the First Digitized Corps, 1st Cavalry Division, their major-subordinate-command command posts and other units participating in EWFX 2002. The 16th Signal Battalion, 13th Signal Battalion, 57th Signal Battalion and 249th Signal Battalion – with elements from 124th Signal Battalion – deployed a network consisting of six ATM node centers, 18 ATM small extension nodes, seven THSDN NCs, 26 THSDN SENs, three THSDN large extension nodes, three legacy NCs, one legacy LEN, six legacy SENs and 14 radio-access units.

Transmission systems were augmented with two TSC-85 and four TSC-93 tactical-satellite terminals, TRC-170 (tropospheric scatter) and nine TSC-154 terminals (secure, mobile, antijam, reliable, tactical terminals). Unique switching systems in the network included the Modular Transportable Communications System and two Vantage commercial digital switches.

Network planners and controllers at 3d Signal Brigade, 16th Signal Battalion and 13th Signal Battalion used integrated-systems control, Network-Management System and SNMPc to engineer and troubleshoot MSE links for voice, data and videoteleconferencing traffic. The extremely-high-frequency communications planner at the brigade's SYSCON used the interim Milstar communications-planning tool to plan and manage the SMART-T network.

The entire network spanned from North Fort Hood to Camp Swift, near Austin, Texas, and covered about 150 miles. Engineering this network to include data as well as voice and battlefield VTC was challenging. Questions arose, such as, "How do you provide high-speed data down to the legacy equipment, which isn't equipped with high-speed multiplexing cards? How do you combine ATM with lower-data-rate THSDN equipment without creating bottlenecks or degrading services? How do you connect packet switches to the high-speed data network and bridge the gap between the two networks?"

Establishing a seamless and efficient tactical C4I network with this varied array of equipment required extensive planning, coordination and a working knowledge of all systems. Network planners, managers and technicians from 3d Signal Brigade and III Corps G-6 – working with their counterparts in 13th Signal Battalion, 1st Cavalry Division and 249th Signal Battalion, 49th Armor Division (Texas Army National Guard) – honed their skills as integrators of every variety of echelons-corps-and-below Signal equipment to ensure a successful mission.

While the distance between 3d Signal Brigade assets at Fort Hood and 249th Signal Battalion assets at Camp Swift was about 110 miles, the distance in technology was about 15 years. We covered the geographical distance by using super-high-frequency multichannel TACSAT (TSC-85s and TSC-93s) and commercial T-1 circuits. The SHF TACSAT provided a direct higher-to-lower VTC path into the corps MSE network from a 3d Signal Brigade SEN at 49th Armor Division's CP to an NC at Fort Hood and then channel-reassigned to a SEN at the corps' main CP.

The T-1 circuit was broken out at a group modem at each end to provide 256 kilobytes VTC and 768 kb data between 49th Division's main CP and Fort Hood's Battle Simulation Center. The T-1 also provided a 512 kb internodal between 249th's NC 81 at Camp Swift and 16th's NC 1 at Fort Hood.

Providing data over MSE

```
! This routing script is generated from
a MS Word Template
! All changes to this script should be
documented below:
! ————————————————————————————————
!
! This template is to generate router
templates for:
!
! HSMUX SENs only
!
! This router template is accurate as
of 03 Oct 00
! POC SSG Mark Hredzak: (254) 288-
7781
! CW2 Curtis Newkirk: (254) 288-
7781
! MAJ James Howell:  (254)287-1652
!
! Area 0 Authentication MD5 has
been removed (3 Oct 00)
!
version 11.3
no service finger
service nagle
service timestamps debug uptime
service timestamps log uptime
service password-encryption
no service udp-small-servers
no service tcp-small-servers
!
hostname SEN-53-I32-V3.1
!  Change the usernames and
passwords before generating
configurations; note
!  that including this password might
change the classification of this
!  template and configurations
generated from it.
!
enable password panther
username 249sig privilege 1 pass-
word xxxxx
username 249sig privilege 15
password xxxxxxx
!
no ip source-route
ip tcp path-mtu-discovery
no ip domain-lookup
ip multicast-routing
ip dvmrp route-limit 7000
!
interface Loopback0
 ip address 148.33.254.50
255.255.255.255
 no ip directed-broadcast
!
! Private Network 172.28.0.0 /16 has
been added to all E0 Interfaces
! for plug and play connectivity with
TOC Routers
! TOC Router Ethernet interfaces to
the SENs must be modified to
! be on the 172.28.0.0 /16 network per
the Corps HSDN Database (3 Oct 00)
!
interface Ethernet0
 description LAN Connection to TOC
router
 ip address 172.28.32.249 255.255.0.0
 ip address 148.33.249.32
255.255.255.192 sec
 ip pim dense-mode
 no ip directed-broadcast
 no ip mroute-cache
 no shutdown
!
interface Serial0

 ip unnumbered loopback0
 ip pim dense-mode
 no ip mroute-cache
 encapsulation ppp
 no ip directed-broadcast
 bandwidth 256
 no shutdown
!
interface Serial1
 description MSE Packet Network
Interface
 ip address 148.13.3.152 255.255.0.0
 no ip directed-broadcast
 ip mtu 576
 no ip mroute-cache
 encapsulation x25 ddn
 bandwidth 16
 X25 nvc 7
 x25 facility windowsize 7 7
 x25 facility packetsize 1024 1024
 clockrate 64000
 no cdp enable
 no shutdown
!
router ospf 21
 redistribute static subnets
 passive-interface Loopback0
 passive-interface serial1
 redistribute bgp 64555 metric 1000
metric-type 1 subnets
 network 148.33.254.50 0.0.0.0 area
0.0.0.0
 network 148.0.0.0 0.255.255.255 area
0.0.0.0
 network 172.28.0.0 0.0.255.255 area
0.0.0.0
 ! Adjust distance so that OSPF internal
routes have distance 15 rather than
! the default of 110.  EBGP's default
distance is 20.
 distance ospf intra 15 inter 15 external
200
!
router bgp 64555
 redistribute connected
 bgp dampening 5 950 2500 12
 network 148.33.254.50 mask
255.255.255.255
 redistribute ospf 21 match internal
 neighbor 148.13.196.1 remote-as
4066
 neighbor 148.13.196.1 distribute-list
10 out
 neighbor 148.13.196.1 distribute-list
12 in
 no auto-summary
!
no ip classless
!
!System Logging
logging trap debugging
logging source-interface Loopback0
!  "Uncomment" and change the next
lines before generating configura-
tions;
!   adjust number of logging stations
as appropriate.
!logging insert_logging_station_IP
! Networks Not advertised to MPN
access-list 10 deny 0.0.0.0
access-list 10 deny 148.33.0.0
access-list 10 permit any
! Networks Accepted/Denied from
MPN
access-list 12 deny   0.0.0.0
access-list 12 deny   148.33.0.0
access-list 12 permit 148.12.0.0
access-list 12 permit 148.33.0.0
0.0.255.255
access-list 12 permit 148.34.0.0
0.0.255.255
access-list 12 permit 172.0.0.0
0.255.255.255
!  Add to the TELNET access list
before generating configurations.
access-list 15 permit 148.33.254.0
0.0.0.255
access-list 15 permit 148.34.128.0
0.0.0.255
access-list 15 permit 172.28.0.0
0.0.255.255
!  Add to the SNMP access list before
generating configurations.
access-list 20 permit 148.33.0.0
0.0.255.255
!  Change the SNMP community
string before generating configura-
tions.
snmp-server community J3Z3vDO5
RO 20
snmp-server community rwstring RW
30
snmp-server community triplethreat
ro 20
snmp-server trap-source Loopback0
snmp-server trap-authentication
snmp-server trap-timeout 600
snmp-server queue-length 20
snmp-server location SEN-53-I32
snmp-server contact
III_CORPS_SYSCON
snmp-server enable traps config
```

Figure 27. Template for border-gateway-protocol statement used to configure routers to accept 148.13 network.

```
snmp-server enable traps snmp
snmp-server enable traps bgp
!
banner motd #
                ATTENTION!
THIS IS A DOD COMPUTER
SYSTEM. BEFORE PROCESSING
CLASSIFIED INFORMATION,
CHECK THE SECURITY ACCREDI-
TATION LEVEL OF THIS SYSTEM.
DO NOT PROCESS, STORE OR
TRANSMIT INFORMATION CLASSI-
FIED ABOVE ACCREDITATON
LEVEL OF THIS SYSTEM. THIS
COMPUTER SYSTEM, INCLUDING
ALL RELATED EQUIPMENT,
NETWORKS AND NETWORK
DEVICES (INCLUDES INTERNET
ACCESS) ARE PROVIDED ONLY
FOR AUTHORIZED U.S. GOVERN-
MENT USE. DOD COMPUTER
SYSTEMS MAY BE MONITORED
FOR ALL LAWFUL PURPOSES,
INCLUDING TO ENSURE THEIR
USE IS AGAINST UNAUTHORIZED
ACCESS, AND TO VERIFY SECU-
RITY PROCEDURES, SURVIVABILITY,
AND OPERATIONAL SECURITY.
MONITORING INCLUDES, BUT IS NOT
LIMITED TO, ACTIVE ATTACKS BY
AUTHORIZED DOD ENTITIES TO TEST
OR VERIFY THE SECURITY OF THIS
SYSTEM. DURING MONITORING,
INFORMATION MAY BE EXAMINED,
RECORDED, COPIED, AND USED FOR
AUTHORIZED PURPOSES. ALL
INFORMATION, INCLUDING PER-
SONAL INFORMATION, PLACED ON
OR SENT OVER THIS SYSTEM MAY
BE MONITORED. USE OF THIS DOD
COMPUTER SYSTEM, AUTHORIZED
OR UNAUTHORIZED, CONSTITUTES
CONSENT TO MONITORING.
UNAUTHORIZED USE OF THIS DOD
COMPUTER SYSTEM MAY SUBJECT
YOU TO CRIMINAL PROSECUTION.
EVIDENCE OF UNAUTHORIZED USE
COLLECTED DURING MONITORING
MAY BE USED FOR ADMINISTRATIVE,
CRIMINAL OR OTHER ADVERSE
ACTION. USE OF THIS SYSTEM
CONSTITUTES CONSENT TO MONI-
TORING FOR ALL LAWFUL PUR-
POSES.
#
!
privilege exec level 1 show configura-
tion
privilege exec level 1 show
!
line con 0
 exec-timeout 2 30
 login local
 history size 100
 transport input none
line aux 0
 session-timeout 3
 exec-timeout 2 30
 login local
 history size 100
line vty 0 4
 access-class 15 in
 exec-timeout 2 30
 login local
 history size 100
!
end
```

Figure 27 continued.

presented another challenge. The 249th Signal Battalion's three NC switches, LEN and six SENs were equipped with first-generation Orderwire Control Unit II's, packet switch and AN/GRC-226 radios. Therefore we had to adjust for the lack of high-speed data capability at the NCs and SENs. The solution was to install routers in the battalion's NCs and SENs and to enhance the packet switches by configuring them at a data rate of 48,000 kilobits per second.

Configuring the routers to accept the 148.13 network was done via a router border-gateway-protocol statement. The routers within 249th Signal Battalion's SENs interfaced directly to the router, bridging the 148.13 and the 148.12 networks. This increased the normal 16-kbps SEN packet-switch link to 48 kbps. This increase in bandwidth by 32 kbps per SEN provided a backup data path and was accomplished with a minimum cost of $7,000 per SEN.

See Figures 27 and 28.

The 57th and 13th Signal Battalions provided the THSDN portion of the network. The 1st Cavalry Division's 13th Signal Battalion found a way to exceed the standard THSDN data rate of 1,024 kb by bypassing the transmission group mux/demux restrictions in the line-of-sight Version 3 radio system (AN/TRC-190). By using an LOS(V)1 at an NC to its local port and shooting to a LOS(V)4 at a LEN, 13th Signal Battalion was able to capitalize on the 2,048 kb capability of the enhanced-transmission-group modular orderwire card. In the EWFX network, 13th Signal Battalion installed 2,048 kb links from LEN 46 to NC 41 and NC 44, each providing 1,024 kbps data and 1,024 kbps voice.

The most advanced systems in the network belonged to 16th Signal Battalion – with elements from 124th Signal Battalion – that provided state-of-the-art ATM switches and high-capacity line-of-sight transmission systems. Six ANCSs equipped with a Lightstream 1010 ATM switch, Cisco 7206 router, Cisco 2924 catalyst Ethernet switches, Cisco 2514 Multimedia Conference Manager gatekeepers and the legacy interface adapter/forward-error-correction transmission adapters made up the largest part of the network backbone, supporting 8,192 megabytes between NCs. Fourteen ASENs, similarly equipped – with the exception of the

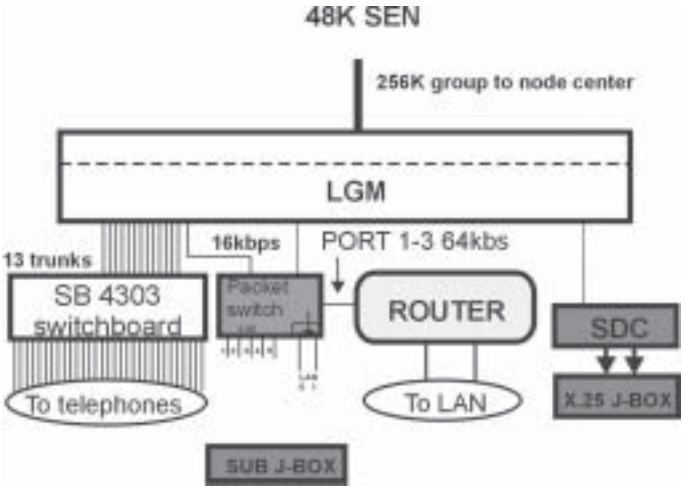

Figure 28. 48K SEN.

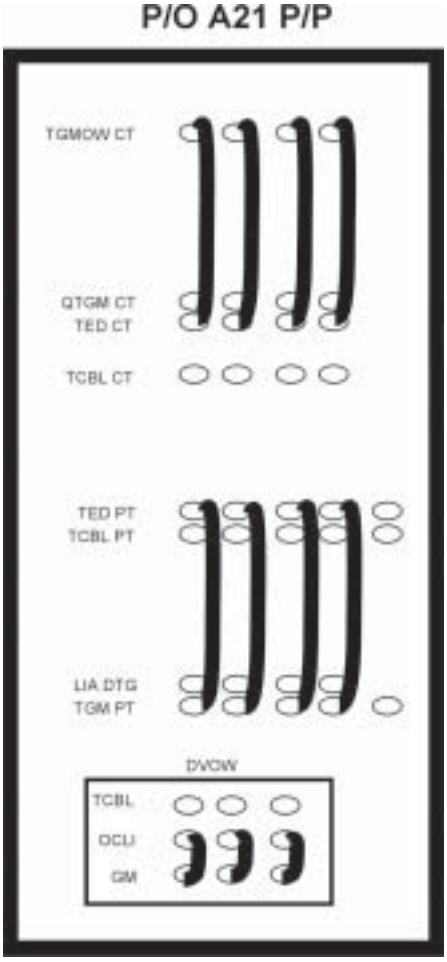

Figure 29. Patching for legacy equipment in the ATM NCS.

Cisco 2514 found only in the ANCS – provided 2,048 mb to CP subscribers.

The Cisco 7206 router supports multiprotocol, multimedia routing and bridging functions. The Ethernet switches provide connectivity for local-area network users. The Cisco 2514 MCM gatekeeper in the ANCS supported H.323 (Internet protocol-based) VTC. Finally, LIA / FECTA is the adapter between legacy MSE voice and data systems and ATM's cell-switching capabilities.

Still other unique switching systems contributed to the EWFX network. The corps' communications-support platoon supported the highly automated corps tactical CP with their MTCS and a Vantage digital commercial switch, which provided IP-based telephones. Another Vantage switch was placed in the BSC and will possibly be used in the future to decrease the number of SENs needed to support a simulation exercise of this size. The MSE phone count (digital non-secure voice terminals) in the BSC complex alone totaled 428, requiring eight TSENs and three ASENs to support.

The highest data rates that could be achieved in the network belonged to ATM NCs, which went up to 8,092 kbps. Next highest was between THSDN NCs – up to 2,048 kbps (using 13th Signal Battalion's technique). When we connected an ANCS to a TNCS, however, the data rate dropped to 1,024 kbps (256 k for data and 768 k for voice). While the TNCS is equipped with a Cisco 3640 router, high-speed FEC circuit-card assemblies and ETGMOW CCAs capable of achieving 1,024 kbps voice and 1,024 kbps data, the limiting factor when interfacing with the ANCS is the ANCS's HSMUX I card, capable of just 256 kbps data.

In conjunction with lowering the data rates, the ATM switch operator had to patch the digital trunk group to legacy mode. This was accomplished on the A21 patch panel (see Figure 29). Network planners had to plan carefully to avoid data "chokepoints" in the network. Overall, subscribers weren't adversely impacted by the differences in equipment.

Transmissions media were the next challenge. A mixture of AN / GRC-245 HCLOS radios and AN / GRC-226 legacy radios in the network meant that soldiers had to become familiar with different troubleshooting techniques and terms used to describe loopback and test procedures applicable to each. HCLOS radios fielded to 124th and 16th Signal Battalions are equipped with over-the-air compatibility, which allows interoperability between the two radios. This was also the case when troubleshooting a TNCS and ANCS. Figure 30 gives an example of LOS troubleshooting for THSDN, while Figure 31 gives an example of ANCS troubleshooting steps.

Long-haul requirements were met using four TSC-85s and six TSC-93s for internodal links, links to critical CPs and higher-to-lower VTC links. Nine AN / TSC-154 terminals provided more beyond-LOS capability. The SMART-Ts proved to be valuable assets with their fast installation time and ability to add redundancy and robustness to the network. Figure 32 depicts the

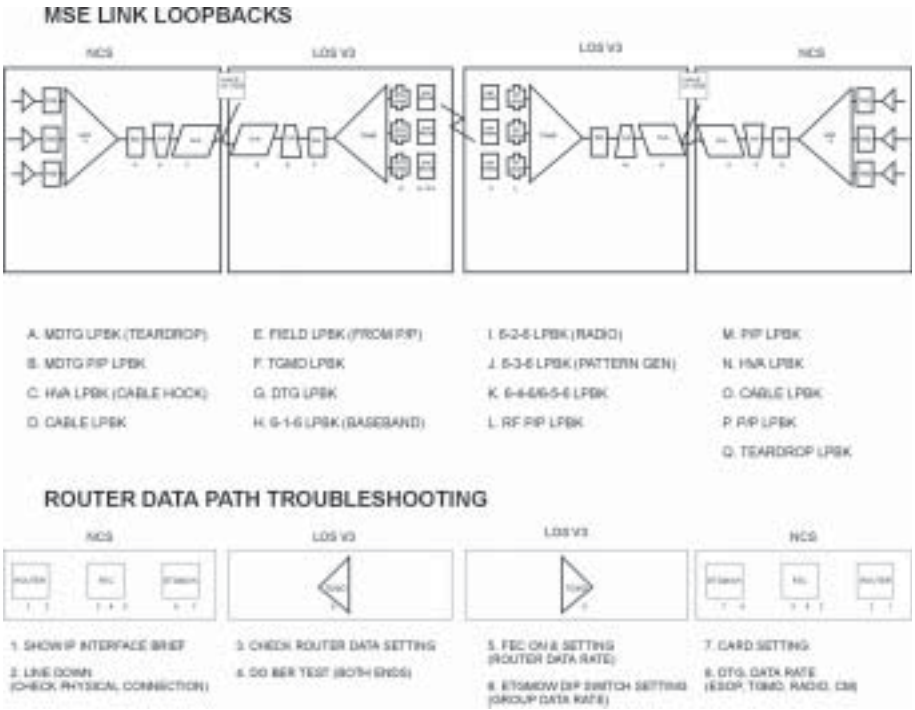

Figure 30. 3d Signal Brigade's NCS to NCS links. Note: master of links coordinates these actions at both ends.

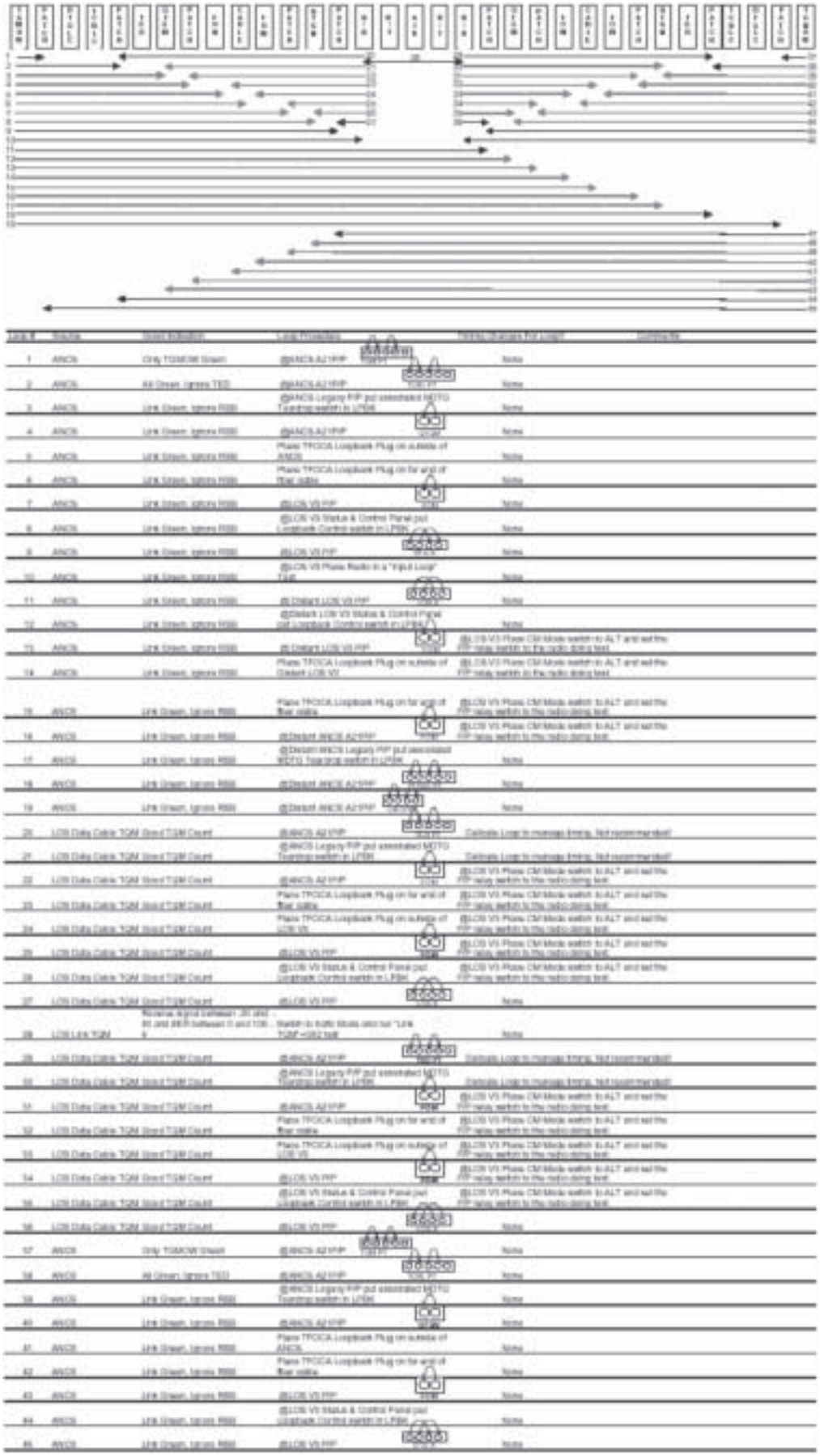

Figure 31. ANCS troubleshooting steps.

satellite network.

Finally, two AN/TRC-170 tropo systems from 313th Signal Company provided a 1,024 kbps internodal link in 13th Signal Battalion's network.

Special consideration was given for serial-base VTC, III Corps' command net. In some cases, we used the HSMUX CCA in the NCS to provide VTC as well as data. Channel reassignments and database management were crucial for this mission. All changes of the switch database to support VTC or data paths had to be closely coordinated to avoid disruption of either of these critical services.

ATM SENs are capable of providing data and serial-based VTC simultaneously. However, there were cases in which we had to use the ASEN in legacy mode due to VTC traffic using most of the bandwidth (Figure 33). This normally occurred over satellite links where the bandwidth was restricted to 1,024 K. Examples of these can be seen in Figures 34, 35 and 36.

While they require extensive planning and coordination, legacy, THSDN and ATM MSE can be successfully integrated into a single network, as demonstrated during III Corps' 2002 BCTP EWFX exercise. The fast pace of technological change, however, requires equipment operators, network planners, managers and technicians to keep an equally fast pace of professional training and self-development in the classroom and in the field.

CW2 Newkirk has been 3d Signal Brigade's network-

management technician since June 1999. He holds an associate's degree from Fayetteville Community College, Fayetteville, N.C. His warrant-officer assignments also include 13th Signal Battalion and 304th Signal Battalion, Seoul, Korea. His enlisted career included assignments as a station technical controller, operations noncommissioned officer in charge, MSE switch operator and platoon sergeant with various units in the United States and Korea, including 589th Signal Company, Stuttgart, Germany; 7th Signal Command, Fort Ritchie, Md.; 275th Signal Company, Seoul; Company C, 11th Air Defense Signal Battalion, Darmstadt, Germany; and Company B, 51st Signal Battalion, Fort Bragg, N.C.

MAJ Jantzen has been the S-3 operations at 3d Signal Brigade since June 2000. She holds a bachelor's degree in mass communications from the University of Illinois in Chicago and a master's degree in telecommunications from Michigan State University. A graduate of the Command and General Staff Officer's Course, she has served in various command and staff positions in the Signal Corps in the United States, Bosnia, Germany, Somalia, Saudi Arabia and Korea. Her assignments include commander, Headquarters and Headquarters Company, 440th Signal Battalion, 22d Signal Brigade, Darmstadt and Lukavac, Bosnia; operations group Signal officer, Combat Maneuver Training Center, Hohenfels, Germany; battalion S-1, battalion maintenance officer and division Signal plans officer, 10th Signal Battalion, 10th Mountain Division, Fort Drum, N.Y., and Mogadishu, Somalia; and platoon leader, 26th Signal Battalion, 93d

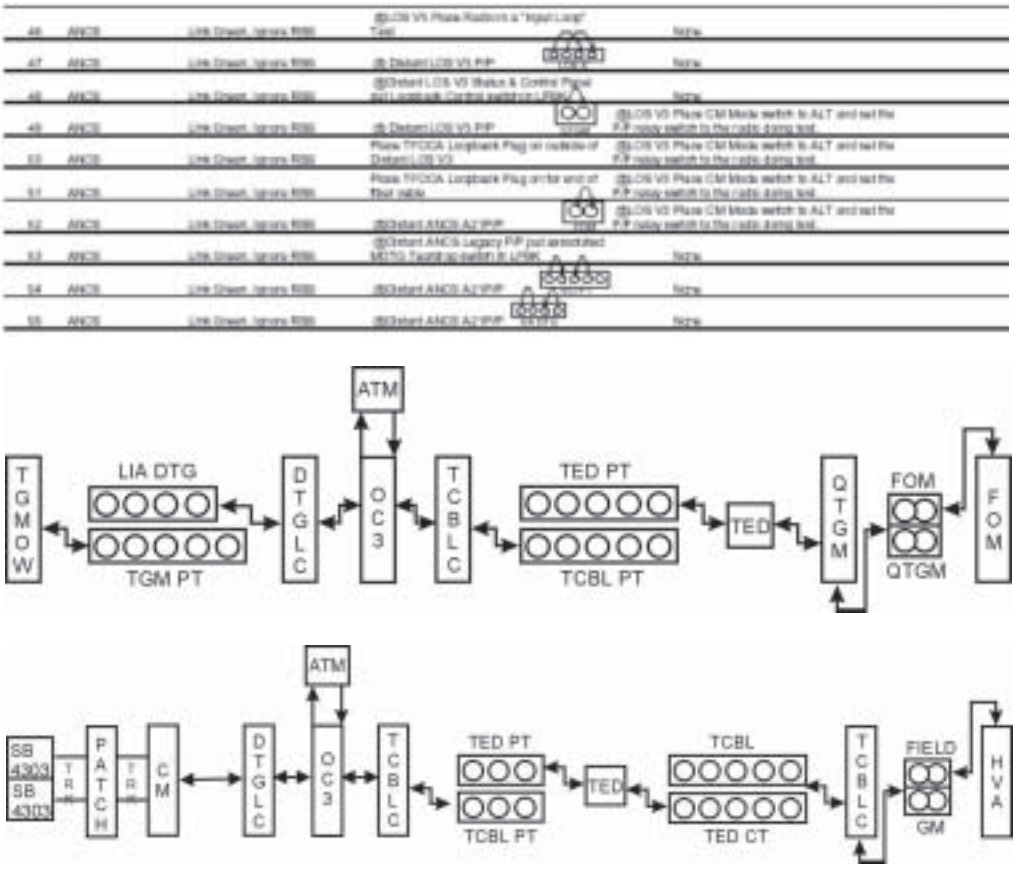

Figure 31 continued. The center diagram depicts the ANCS DTG, while the bottom diagram illustrates the ASEN ATM mode.

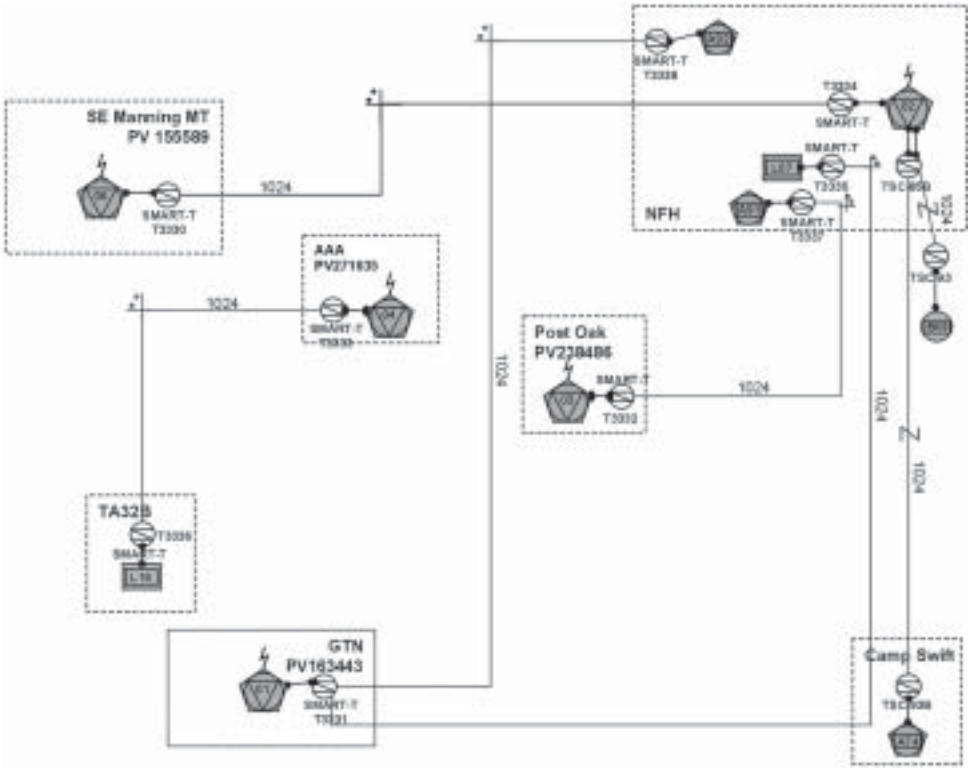

Figure 32. TACSAT network for III Corps' EWFX02.

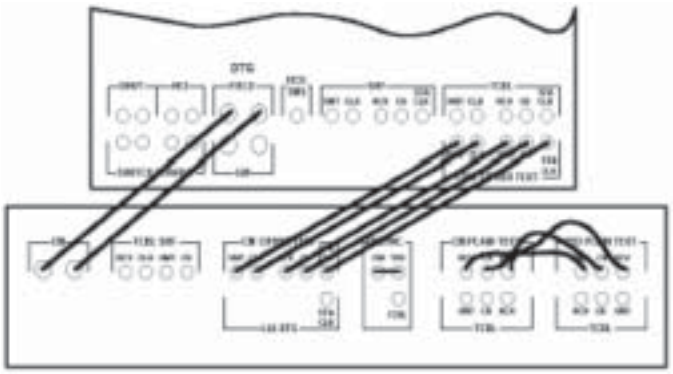

Signal Brigade, in Operation Desert Storm.

More info, next page
See related story, Pg. 60

Figure 33. Legacy patching was employed in the ASEN due to VTC traffic taking most of the bandwidth. The top panel represents a partial view of the ASEN patch panel. The bottom panel is the new modified auxiliary patch panel.

ACRONYM QUICKSCAN

ANCS – a(synchronous-transfer mode) node-center switch
ASEN – a(synchronous-transfer mode) small extension node
ATM – asynchronous-transfer mode
BCTP – Battle Command Training Program
BGP – border-gateway protocol
BSC – Battle Simulation Center
C4I – command, control, communications, computers and intelligence
CCA – circuit-card assembly
CP – command post
ETGMOW – enhanced-transmission-group modular orderwire
EWFX – Embedded Warfighter Exercise
FEC – forward-error correction
HCLOS – high-capacity line-of-sight
HSMUX – high-speed multiplexing
IP – Internet protocol
K – shorthand for kbps, kilobits per second
Kb – kilobyte(s)
Kbps – kilobits per second
LEN – large extension node
LIA/FECTA – legacy interface adapter/forward-error correction transmission adapter
LOS(V) – line of sight (version)
Mb – megabyte
MCM – Multimedia Conference Manager
MSE – mobile-subscriber equipment
MTCS – Modular Transportable Communications System
Mux/demux – multiplex/demultiplex
NC – node center
SEN – small extension node
SHF – super-high frequency
SMART-T – secure, mobile, antijam, reliable tactical terminal
SNMP – simple network-management protocol
SYSCON – systems control
TACSAT – tactical satellite
THSDN – tactical high-speed data network
TNCS – t(actical high-speed data network) node-center switch
TSEN – t(actical high-speed data network) small extension node
VTC – videoteleconference(ing)

DTG	Team Label	Start NCMD	End NCMD	DTG Rate	TGC	TSD	DTGLC Card #	DTGLC Port #	LIA/FECTA Card #	TGBL Port #	TGBL Rate	FEC Mode	REMARKS
3	S3107	1-5	1-12	1024	1	2							
3													
4	S3A68	1-27	1-28	512	7	4	8	3	14	1	1024	BYPASS	SMART-T
6	S3A68	1-27	1-28	512	10	3	9	4	16	2	1024	BYPASS	LOS
7	S3A76	1-13	1-14	256	13	7	10	1	15	1	2048	BYPASS	
8													
17	DTS	2-8	2-12	512	18	18							
18	S3311	2-15	2-28	256	3	11	18	4	17	2	2048	BYPASS	
19	S3106	2-23	2-28	768	2	12	11	1	19	1	8192	BYPASS	
21	S3933	2-29	2-32	512	9	13	11	2	18	2	2048	BYPASS	
22	B40	2-13	2-18	1024	8	14							JUMP!
23					11	19	11	4	19	2	2048	BYPASS	
3	SYSCON	1-16	1-18	512	11	8							
6	DTIG	1-31	1-34	512	41	9							
9	HSMUX	1-19	1-26	1192		8							
19	S3103	2-5	2-8	512	1	1							

Figure 34. Example of ATM database.

	TED	TGC #	NCMD START	NCMD STOP	V	D	VTC	AGGR	ETGMOW DIP 87654321	ETGMOW SLOT	HSFEC SLOT	FEC DIP 4321	RTR SER PORT
1	1	2	7	10	256			256					
2	2	8	5	6	256			256					
3	3	1	19	20	256	256		512	11100000	XA65-05	XA64-09(1)	1011	1/0
4	4	11	21	24	512	512		1024	11100100	XA65-06	XA64-09(2)	1001	1/2
5	0	9	23	24	512	512		1024	11100100	XA65-09	XA64-09(1)	1001	1/0
6	6	10	31	34	512	512		1024	11100100	XA65-10	XA64-11(1)	1001	1/3
7	7	3	15	6	512	512		1024	11100100	XA65-11	XA64-11(2)	1001	2/0
8	8	8	11	14	512	512		1024	11100100	XA65-12	XA64-13(1)	1001	2/1
16	9	13	7	10	512	512		1024	11100100	XA75-03	XA74-09(1)	1001	2/2
17	10	14	5	6	256			256					
18	11	15	19	20	256			256					
19	12	4	23	26	512	512		1024	11100100	XA75-06	XA74-11(1)	1001	3/0
9	0	12	25	26	256			256					
21	13	5	27	32	768	256		1024	11100110	XA75-10	XA74-11(2)	1011	3/1
22	14	16	15	18	512	512		1024	11100101	XA75-11	XA74-13(1)	1001	3/2
23	15	6	11	12	256	256		512	11100000	XA75-12	XA74-13(2)	1011	3/3

Figure 35. Example of THSDN database.

NC01								
DATA CHANNEL REASSIGNMENTS								
ROUTER INT	HSMUX DTG	START CHAN	END CHAN	TO DTG	START CHAN	END CHAN	HSMUX PORT	TO TEAM
S4/0	9	7	22	2	49	64	ETGMOW	S5307
S4/1	9	23	38	22	33	48		53B90
S4/2	9	39	54	1	17	32		ISYSCON
S4/3	AOD 61	04-09	04-12	T-20	07-24	07-27		
HSMUX DIP SWITCH SETTINGS = 00011101								

NC01 VTC CHANNEL REASSIGNMENTS										
FROM	TEAM	DTG	START	END	TO	START	END	TO	TEAM	
CMAIN	S5307	2	17	32	4	17	32	CTAC	53A68	WHEN SMART-T
CMAIN	S5307	2	17	32	6	17	32	CTAC	53A68	WHEN LOS
CMAIN	S5307	2	33	48	22	17	32	CREAR	53B90	
4ID	53G33	21	17	32	17	17	32	4ID	53G73	

Figure 36. Example of channel reassignments.

Have you seen Army Communicator on the Worldwide Web?

A sampling of what's there:

- **Back issues since 2000**
- **"Most requested" articles since inaugural issue (1976)**
- **Subscription procedure**
- **Writer's guide and style manual**
- **Deadlines for manuscripts**

Web address:
www.gordon.army.mil/AC/
Editor's email:
ACeditor@gordon.army.mil

Hard work precedes user-friendly data communications for 49th Armored Division

by SPC Robert Jones

CAMP SWIFT, Bastrop, Texas – Virtuoso technique – in any artistic endeavor – has been described as the ability to make the impossible look effortless. Nine members of Signal Detachment 1, 49th Armored Division, put in many months of preparation to establish near-effortless data communication for 49th Armored Division during III Corps' Phantom Lightning exercise.

The Embedded Warfighter Exercise (part of III Corps' Battle Command Training Program) tested 49th's combat readiness through computer simulation rather than actual troops on the ground. Therefore it was essential that data communications be ready and secured by the time the actual exercise commenced.

Figure 37. CPT Rob McLain and SPC Joseph Nichols of Detachment 1 (Signal), 249th Signal Battalion, 49th Armored Division, Texas Army National Guard, connect a myriad of workstations to the network at Camp Swift. Detachment 1 participated in III Corps' Embedded Warfighter Exercise 2002, part of the corps' Battle Command Training Program.

"When we first came here in November [2001], there was no wiring in the building," said CPT Rob McLain, 49th Armored Division's automation officer. "Since then, a lot of us have been coming in on drill weekends and during the week, working very diligently." According to McLain, Detachment 1, formed in November 2001 from elements of 249th Signal Battalion, hit the ground running at Camp Swift.

"We're using eight servers to handle the workflow, and we're running much faster than dialup," said McLain. "During a mission-readiness rehearsal at Fort Polk, La., we processed 20,000 e-mails during a three-week period." By the EWFX's end, in the space of one week, Detachment 1 processed more than three times as many e-mails.

Securing the network through encryption and virus-proofing are some of the duties that SPC Eric Adam, server administrator, performs. "It gets very intense when you have to make sure the network is secure from outside attacks," Adam said. Adam likens securing a network to guarding an installation. "It's similar to posting guards at each 'gate' or 'entrance' to the network so hackers can't access classified information."

Although the EWFX's mission was simulated, making sure 49th Armored Division's various components – almost 110 subscribers at Camp Swift and Fort Hood – were connected and secured was Detachment 1's vital, "real-world" mission. Providing information more quickly and making it more user-friendly than even III Corps and the other major Regular Army divisions did was something members of this Army National Guard Signal unit have been doing since their deployment to Bosnia for their Stabilization Forces 7 rotation in 1999. The 249th Signal Battalion's tool in accomplishing its real-world mission is a web-based program called ScribeVision.

ScribeVision is the brainchild of data technician CW2 Rodney Hammack. Exclusive to 49th Armored Division, ScribeVision is a secured web-based homepage that keeps the division connected. Noted for its speed, ScribeVision makes it possible for units to communicate in

real-time and thus prevents unnecessary delays in the mission's execution.

"The central concept of ScribeVision is that we create a portal and set up the infrastructure for it, which empowers all the different sections. The users provide the content; we provide the method for it to be displayed," Hammack said.

Air Force Tech. Sgt. David Loyd of 209th Weather Flight, Texas Air National Guard, was impressed by ScribeVision's flexibility and responsiveness. "It's a very good tool for keeping people informed," he said. "Detachment 1 was immediately responsive to any suggestions we made."

One of Detachment 1's future projects for increasing data integrity and efficiency is a web-based server that could fit in a wooden footlocker. "This would allow our elements to carry out local communications even if their outside network is down," said McLain.

For the Signal Corps data virtuosos of Detachment 1, staying cutting-edge means never settling for the status quo.

SPC Jones is a photojournalist with 100th Mobile Public Affairs Detachment, Texas Army National Guard.

ACRONYM QUICKSCAN

EWFX – Embedded Warfighter Exercise

Unmanned aerial vehicles proving their worth over Afghanistan

by Jim Garamone

*(**Editor's note**: for a discussion of UAVs and communications aspects, see the articles "High-altitude-endurance unmanned aerial vehicles pick up communications node" by SSG Samuel Zabrdac and MAJ Marilyn McAllister in the Spring 1996 edition of **Army Communicator**, and "UAVs and WIN: a command, control, communications, computers, surveillance and reconnaissance winner" by Scott Long and Sonny Haskins in **AC**'s Summer 1997 edition.)*

WASHINGTON – For years, military thinkers have tried to harness the power of unmanned aerial vehicles. Changes in technology mean that members of today's military are able to put that promise to work.

Defense Secretary Donald Rumsfeld and the services' leadership have long recognized the "transformational" capabilities inherent in UAVs. The accomplishments of the Air Force Predator and Global Hawk unmanned aircraft in Afghanistan demonstrate these systems' abilities and point the way to the future. Rumsfeld added more than $1 billion to UAV programs in the fiscal 2003 defense budget request to spur progress in these critical capabilities.

UAVs have many attractions for the military. They can generally be smaller and lighter than manned aircraft because, among other things, they don't need equipment to support a crew. The air-vehicle portion of the overall system is also generally cheaper. Today's Predator, for instance, costs about $5 million.

Planners are using UAVs for missions too dangerous for manned aircraft. For example, UAVs can be sent to locate surface-to-air missile sites without putting crew members in harm's way.

Right now the ability to "park" a UAV over a trouble spot is one of the systems' greatest advantages, said Dyke Weatherington – deputy of the UAV planning task force in the defense secretary's office – in a recent interview.

Figure 38. Airman 1st Class John Clark from 15th Reconnaissance Squadron, Nellis AFB, Nev., performs maintenance on a Predator UAV after its return from a reconnaissance flight over Afghanistan.

"These systems ... park over the bad guys, watch them continually, never give them a break from (our monitoring) their activities and severely limit their ability to mount an effective threat," he said.

He said operations in the Balkans demonstrated an airborne video-surveillance system "provides what a warfighter wants – a persistent CNN 'eye-in-the-sky' sort of capability."

Balkan operations also suggested the logical next step in UAV fielding: arming the platforms. Operators would see targets of opportunity with UAVs but have to call in manned aircraft to attack them, Weatherington said.

"In many cases, we either couldn't get strikes to the target in time or the manned aircraft couldn't find that target the UAV had found," he said.

"UAV" really applies to any airborne system that has no operator or pilot aboard. This runs the gamut from small systems literally launched by a rubber band, like the Marine Corps' Dragon Eye, to the jet-powered Global Hawk.

There are two general classes of UAVs. The Predator is an example of one type. Ground-bound pilots in a control van use a yoke, stick and rudder to fly the aircraft, Weatherington said.

The Global Hawk is an example of an autonomous UAV, the second type. Specialists program an onboard computer that controls the aircraft flight from point-to-point. The Global Hawk takes off and lands itself. While humans oversee the programming and tell the UAV where to go, it's the onboard computer that actually controls the air vehicle in flight.

The military has about 200 UAVs of all types today. Weatherington said the number is projected to rise dramatically in the

Figure 39. A Global Hawk UAV sits in a hanger after its arrival at Langley AFB, Va. June 21, 2001. The aircraft flew non-stop from Edwards AFB, Calif., to demonstrate its capabilities to North Atlantic Treaty Organization representatives at the Supreme Allied Commander-Atlantic headquarters.

next five years to around 500. One exciting new capability that may enter the force is the unmanned combat aerial vehicle.

The UCAV is the first UAV designed from the start to carry weapons. Weatherington said the vehicle will have stealth capabilities and will be designed to go into dangerous areas and destroy targets. Both the Navy and Air Force are working this program from slightly different approaches. The Air Force's cost goal is to bring the UCAV in at about one-third the price of the Joint Strike Fighter, he said.

The Air Force demonstrated the UCAV's viability by arming a Predator with Hellfire anti-armor missiles. Weatherington said the Air Force is also looking at other weapons to place on other UAV aircraft including the bigger, follow-on Predator B. The Air Force envisions using Predators and Predator Bs as hunter-killer teams.

Most Defense Department and service officials believe UAVs are truly transformational. The systems help other manned systems and give operators more capabilities at a reduced cost.

The systems, Weatherington said, represent significant opportunities for the U.S. military to improve the way it conducts operations around the world. Service members would be freed to make critical decisions while letting UAVs do many of both the dull and dangerous missions.

Parking UAVs over bad guys for days or weeks and never giving them a chance to do something unseen is truly transformational, he said.

"The other aspect is that we're doing that without putting service members at risk," he concluded. "Those capabilities really argue that it's appropriate to invest in this technology."

Mr. Garamone writes for American Forces Press Service.

ACRONYM QUICKSCAN

CNN – Cable News Network
UAV – unmanned aerial vehicle
UCAV – unmanned combat aerial vehicle
WIN – Warfighter Information Network

From the U.S. Civil War to Afghanistan: a short history of UAVs

by Jim Garamone

WASHINGTON – During the American Civil War, both sides tried to use rudimentary unmanned aerial vehicles.

According to Dyke Weatherington, deputy of the defense UAV office, Union and Confederate forces launched balloons loaded with explosive devices. The idea, he said, was for the balloons to come down inside a supply or ammunition depot and explode. "It wasn't terribly effective," he said during a recent interview.

The Japanese tried a similar ploy late in World War II. They launched balloon bombs laden with incendiary and other explosives. The theory was high-altitude winds would carry the balloons over the United States, where the bombs would start forest fires and cause panic and mayhem. The Japanese weren't able to gauge their success and so called it a flop and quit after about a month.

The United States also tried a type of UAV during World War II called Operation Aphrodite. "There were some rudimentary attempts to use manned aircraft in an unmanned role. The limitation there was we didn't have the technology to launch these systems on their own and control them," Weatherington said.

Allied forces used the modified manned aircraft basically as cruise missiles. The idea was a pilot would take off, get the plane to altitude, ensure it was stable and then pass control to another aircraft through a radio link before bailing out.

It was on one such top-secret Operation Aphrodite mission in 1944 that President John Kennedy's older brother, Navy LT Joseph Kennedy

Jr., died when his bomber mysteriously exploded after takeoff.

During the Vietnam War, technology started to make UAVs more effective. Weatherington said they were used fairly extensively and were called drones.

Large numbers of modified Firebee drones overflew North Vietnam. The aircraft, about the size of today's Predator UAV, first launched for simple day-reconnaissance missions at varying altitude levels. "They had conventional cameras in them," Weatherington said. "Later on, they were used for other missions such as night photo, comint and elint, leaflet dropping and surface-to-air missile radar detection, location and identification."

One of these Firebees hangs in the Air Force Museum at Wright-Patterson AFB, Ohio, amassing more than 65 individual missions. As a whole, Firebees flew more than 3,400 sorties during the Vietnam War.

Several of the UAVs we know today owe much to Israel, which develops UAVs aggressively. The U.S. Hunter and Pioneer UAVs are direct derivatives of Israeli systems, Weatherington said.

The Navy and Marine Corps operate the Pioneer UAV system, which has been in operation since 1985. Once during Operation Desert Storm, Iraqi troops actually surrendered to a Pioneer.

At the time, the battleship USS Missouri used its Pioneer to spot for its 16-inch main guns and devastate the defenses of Faylaka Island, which is off the Kuwaiti coast near Kuwait City.

Shortly after, while still over the horizon and invisible to the defenders, the USS Wisconsin deliberately flew its Pioneer low over Faylaka Island. When the Iraqi defenders heard the sound of the UAV's two-cycle engine, they knew they were targeted for more naval shelling. The Iraqis signaled surrender by waving handkerchiefs, undershirts and bedsheets.

Following the Gulf War, military officials recognized the worth of the unmanned systems. The Predator started life as an Advanced-Concept Technology Demonstration project. The program hurried the Predator's development along, and it demonstrated its worth in the skies over the Balkans.

The Predator operates between 15,000 and 25,000 feet. It carries three sensor systems: a color video camera and synthetic-aperture radar.

The Air Force has also placed Hellfire missiles aboard the Predator. In the near future, the UAV might aim a laser at a target and attack it. The combat Predator can also mark targets with its laser for other aircraft or read targets marked by other sources.

Predator is not an all-weather system, however. As a result of lessons-learned in the Balkans, Predator employs a simple anti-icing system, which allows it to exit the icing condition but won't allow it to conduct continuous operations in the condition. The new Predator B has a number of characteristics that will better allow it to deal with a wider range of environmental events, including icing conditions.

The Global Hawk is a jet-powered UAV taking to the skies over Afghanistan. Still under development, it's at the same stage Predator was when it first flew over Bosnia. Global Hawk operates around 60,000 feet, and its suite of sensors is akin to what the U-2 reconnaissance plane carries.

Global Hawk doesn't carry a very sophisticated signal-intelligence system, Weatherington said. But, tests show Global Hawk has great potential in this area, and the Air Force continues to develop its full capability.

Persistence is a unique capability for UAVs, Weatherington said. Predator can stay in the air for up to 40 hours. Global Hawk – at ranges measured in thousands of miles – can loiter in an area for more than 24 hours.

So what's up for the future in UAVs? The Air Force and Navy are designing and testing combat UAVs. The Army is developing a tactical UAV called Shadow 200. This will give leaders "over-the-hill" surveillance capabilities. The Marine Corps has Dragon Eye, a small, hand-launched UAV that can give small-unit leaders a picture of the battleground.

Some UAVs under development will be "as small as your hand," Weatherington said. "In the future it may be that a small UAV could fly into the window of a building, land at some innocuous location and observe activities."

Mr. Garamone writes for American Forces Press Service.

ACRONYM QUICKSCAN

UAV – unmanned aerial vehicle

DEPARTMENT OF THE ARMY
ARMY COMMUNICATOR
USASC&FG
ATTN: ATZH-POM
Fort Gordon, Georgia 30905-5301

OFFICIAL BUSINESS

Second-Class Mail
Postage and Fees Paid
Department of the Army
ISSN 0362-5745

ARMY COMMUNICATOR

Signal Towers, Room 707
Fort Gordon, Georgia 30905-5301

PIN: 076575-000