Now there's interference protection for VHF-FM radio communications with

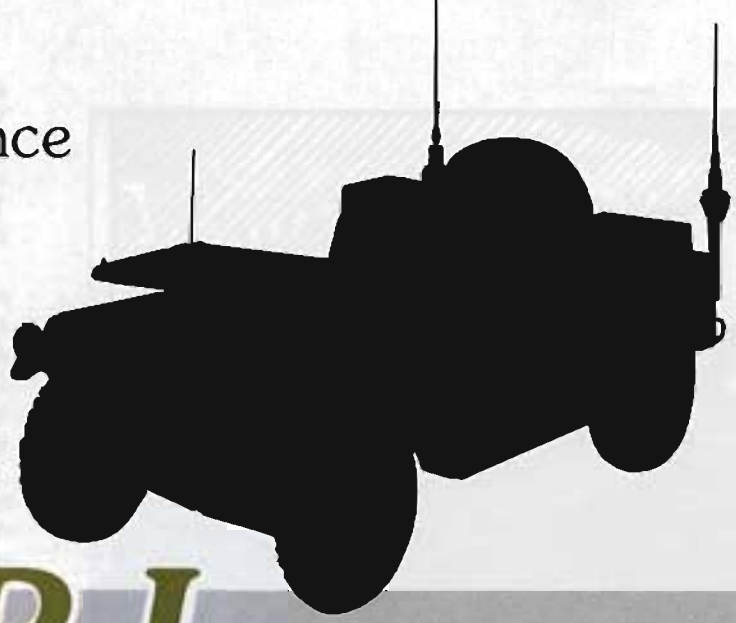

SNAP-I

The Steerable Null

by David M. Fiedler and Charles Miencke

Figure 1. Steerable Null Antenna Processor (SNAP-1), CP-1380/VRC

Recently, there have been several articles and considerable discussion in THE ARMY COMMUNICATOR concerning communication jamming and electronic counter-countermeasures (ECCM) approaches. The central ideas of those discussions are:

- Communications jamming is a current real problem. Deliberate jamming is an established Soviet doctrine. Inadvertent jamming is a spillover from the severely congested frequency allocations and, interference generated by the multiplicity of collocated equipment, such as radars, generators, and vehicles.
- To date there is no mystical ECCM approach that is a single solution to protect against jamming. Rather, it is a combination of items which properly complement and supplement each other to overcome the jamming environment or which force the enemy into inefficient expenditure of resources and increased exposure if he is to persist. Certainly, there is no substitute for the well trained and skilled radio operator who recognizes the jammed environment and employs the various doctrinal concepts techniques, and equipment to negate it. Properly maintained and operating equipment and knowledge of doctrinal procedures are also essential.
- ECCM capability is urgently required for existing communications systems. True, jam resistant systems, such as SINCGARS-V, are underway; however, it will be many years before they complete development and are deployed. Even then, the vast quantity of existing equipment will assure their continued utilization for many years to come.

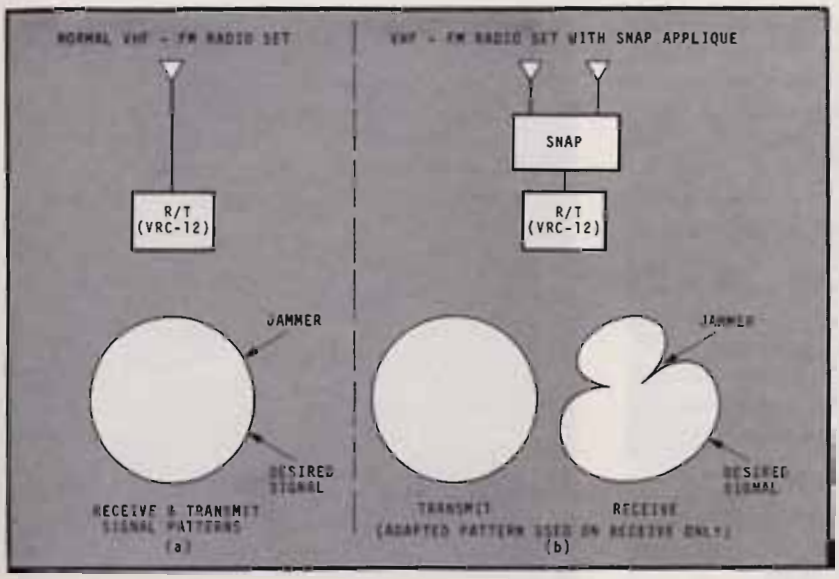

Figure 2.
Antenna Signal Patterns with and without SNAP Application

Antenna Processor ECCM Device

- The present capability to counter jamming for existing VHF-FM combat net radios is limited to operator techniques (e.g., changing frequency, terrain masking), increasing power output and the employment of directional antennas. These cannot always adequately counter jamming efforts and are sometimes at variance with other requirements. Directional antennas, for example, are difficult to employ while on the move and limit direction of communication.
- Response to the increased jamming threat and established problems has not been overwhelming. Operator training and doctrinal concepts are just emerging and little equipment has been fielded to alleviate them.

This article describes a piece of ECCM equipment, a Steerable Null Antenna Processor (SNAP-I), CP-1380/VRC (figure 1) which provides interference protection for VHF-FM tactical communication radios. This equipment is being developed jointly by the SINCGARS Project Manager and the Army Electronic Warfare Laboratory for use with the AN/VRC-12 family of radios.

SNAP development and operational tests were completed in October 1978, showing explicitly that the addition of SNAP to the radio frequency link allows communication traffic to flow in a jammed environment. Based on the results of these tests it has been demonstrated that SNAP can provide an excellent margin against a single jammer.

SNAP, CP-1380/VRC

The SNAP processing system consists of two standard antennas (AS-1729, RC-292, AS-2731, etc.); the SNAP Processor; and the VHF-FM Transceiver (RT-524, etc.) whose receiver is to be protected. The SNAP Processor automatically causes a strong interfering signal to be degraded to a level below a weaker desired signal by pointing a spatial null (effectively an attenuator) in the direction of the interference. The spatial null is achieved by the insertion of appropriate amplitude and phase corrections in the antenna paths so that a signal subtraction occurs at the arrival angle of the jamming signal. The characteristics of the SNAP system are:

- Provides ECCM protection to the receiver of the associated communications radio set by providing a 35 dB (3100 to 1), or more, reduction to a larger interfering signal.
- Effective against stationary or moving jammers.
- Operation is automatic, hands-off, while operating on the move or at a halt.
- Provides discriminants between friendly communication signals and undesired interference.
- Transparent to communications channel, special signals not required.
- Interoperable with non-equipped radios.
- No electronic signature; nulling process occurs during reception of signals only; therefore, SNAP protection cannot be detected by enemy radio frequency/direction-finding equipment.
- Uses standard antennas and installation hardware.

Since we all know that nature doesn't provide "something for nothing," there are requirements for SNAP implementation:

- The addition of a second antenna. (The two antennas with SNAP are sometimes referred to as an adaptive antenna array.)
- Space and DC power for SNAP.

An interference or jamming signal works to capture or block the receiver of a friendly communications radio, thereby destroying the intelligibility or reception of a desired signal. As shown in figure 2(a), a communications radio with an omnidirectional (whip) antenna cannot differentiate between desired and interference signals and always processes the stronger received signal.

With the addition of a second antenna and SNAP, figure 2(b), it is possible to differentiate between desired and interfering signals and, if they are separated in azimuth, to automatically steer the null of the resultant antenna pattern to the direction of the interference. In effect, this places a very large attenuator in series with the interfering signal, enhancing reception of the desired signal. By transmitting through only one of the antennas, the transmit pattern is the same as if the second antenna and SNAP were not present.

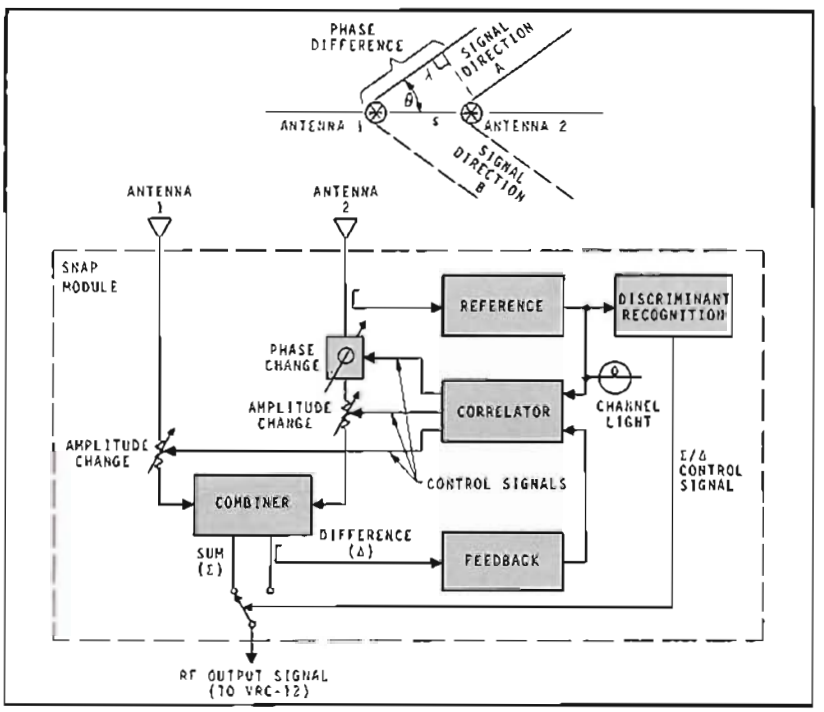

Figure 3. SNAP Functional Diagram

For a given jammer signal at the input to the unprotected communications receiver (based on the jammer's range, transmitter power and antenna directivity), there is a range "r" beyond which desired signals cannot be received due to receiver capture by the jammer. With SNAP placed at the RF input to the communications receiver, a 35 dB (or more) null is placed in the direction of the jammer. In theory, this 35 dB null extends the ground-to-ground range of the desired communication to 7.5R (and to 56R for ground-to-air communications.)

As shown in figure 3, an interference source located at "A" (or "B" due to mirror image symmetry) produces the same signal at antennas 1 and 2. However, there are phase and amplitude

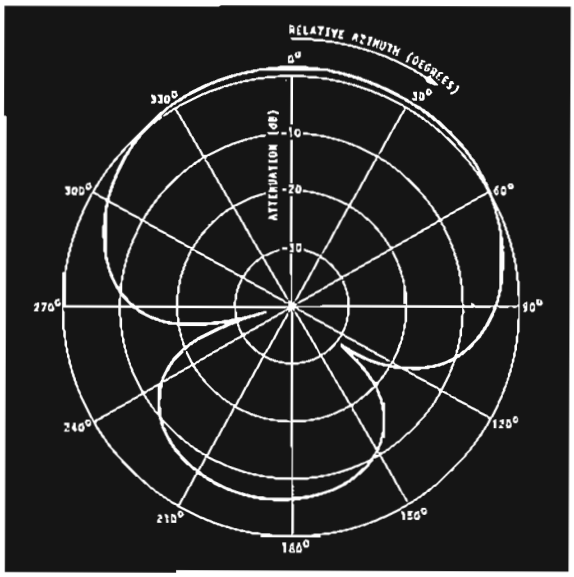

Figure 4. Typical Null Pattern

difference between the signals due to antenna separation, s, and, the angle, θ, of the interference source relative to the straight line plane connecting the antennas.

It is the phase and amplitude differences which permit electronic circuits in SNAP to change the phase and amplitude of the interference (strongest) signal in the signal paths associated with antennas 1 and 2. The criterion is that when the antenna signals are combined, the resultant signal is a minimum. This subtraction (Δ) produces a null in the receive pattern in the direction of the interference source (and its mirror image location).

The SNAP processor (CP-1380/VRC) contains two receivers, a reference and feedback, which provide RF input to the correlator. The correlator processes these signals according to a prescribed protocol (or algorithm) and provides control signals to the phase and amplitude correction elements (known as a vector modulator), which are in series with the antenna signal paths. The object is to provide replicas of only the strongest signal at both inputs to the combiner. These signals are then subtracted (Δ) in the combiner. The output is routed to the protected receiver (VRC-12).

The reference amplifier, feedback amplifier, correlator and vector modulator work together in a closed loop to minimize the output strength of the largest received signal. If an undesired (jamming) signal is assumed to be the stronger, it predominates in the reference channel; it controls the settings of the vector modulator; and the RF output signal is selected from the difference (Δ) channel.

When the desired signal is the largest input signal, the Discriminant Recognition circuit detects this and automatically switches the RF output signal to the summation (Σ) channel of the combiner. This assures that the spatial null is not placed in the direction of the desired signal. Figure 4 shows a representative azimuth receiving pattern for the SNAP system.

INSTALLATION IS A SNAP

Figure 5 is a schematic representation of a typical SNAP installation. A standard AN/VRC-12 receiver-transmitter is used, along with its associated whip antenna (e.g., AS-1729, AS-2731, or other). A second standard antenna is added, separated from the first antenna by approximately 5 feet. SNAP is installed at any convenient location and cable interconnected with antennas and VRC-12. There are no modifications to the communication radio or antennas.

For VRC-12 installations, two additional components are supplied with SNAP. The first of these is the antenna control junction box containing circuits to automatically tune both antennas from the single antenna tuning control output from the VRC-12. The second component is a cable which allows snap to pass all the transmitter power into the #1 antenna whenever the transmitter is keyed. Figure 6 shows SNAP installed in a M-151 alongside a VRC-12.

SNAP OPERATION

Basic operation is described with reference to front panel controls shown in figure 1. Normal set-up:

- PWR circuit breaker is on.
- FREQUENCY thumbwheel switches are set to the same operation frequency as the VRC-12.
- Mode switch set to BYPASS.
- Three position toggle switch set to the center NORM position for automatic operation.

The VRC-12 is now operating as if SNAP were not present. However, the CHAN indicator light on SNAP illuminates whenever there is energy received at the selected frequency.

If the light is lit and there is no audio present, the operator should assume he is being jammed and activate SNAP by placing the mode switch to

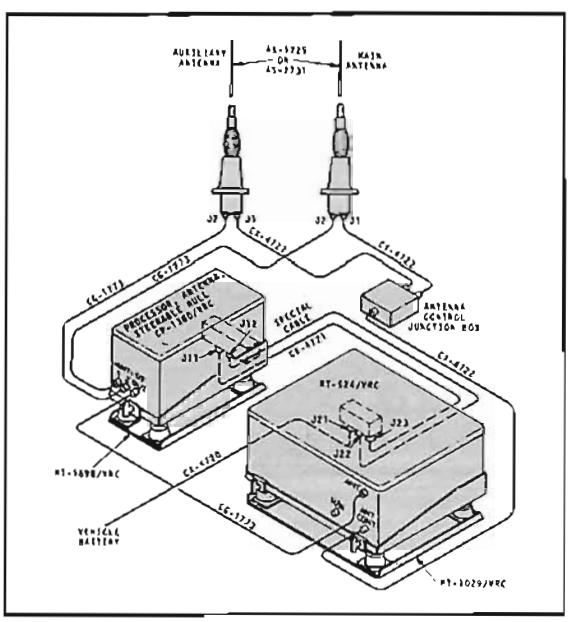

Figure 5. SNAP Installation for AN/VRC-12.

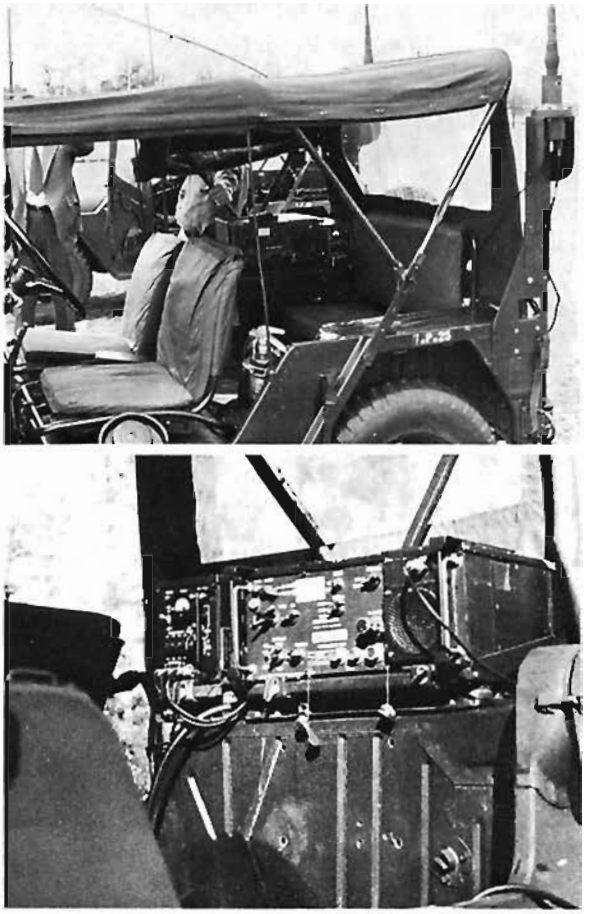

Figure 6. SNAP Installed in M-151 Alongside a VRC-12.

AUTOmatic. SNAP now places the null in the direction of the strongest receive signal (jammer) and tracks its motion. If the jammer goes off of the air, SNAP automatically prevents nulling the desired signal.

Manually placing the three position toggle switch in either (Σ) or (Δ) positions overrides the automatic operation of the discriminant recognition circuit. This operation would be used to acquire the desired signal when the stronger undesired signal (jammer) also contains the discriminant. The operator would be aware of this through illumination of the CHAN light with no audio present.

For semi-automatic operation, the operator places the mode switch at SA and depresses the pushbutton. SNAP nulls on the largest input signal; releasing the pushbutton causes SNAP to store and freeze the control settings in the vector modulator. This mode of operation is convenient for static jammer locations.

For manual operation, the operator places the mode switch to MAN and operation of the front panel I/Q "joy stick" control determines correlator input signals and the subsequent control settings in the vector modulator. The operator observes the affect of his action on either the front panel meter and/or thru the audio signal from the radio. This mode of operation is useful in discriminating against a jammer who is in close azimuth proximity to the desired signal.